Model Name: ROM-DB7502 A102-1

01	COVER PAGE
02	HISTORY
03	BLOCK DIAGRAM
04	POWER BLOCK DIAGRAM
05	POWER ENABLE SEQUENCE
06	DC IN / +V1.8
07	BATTERY CHARGER
08	+V3A / +V5A / +V3 / +V5
09	+V12
10	LVDS0
11	LVDS1
12	HDMI & MINI PCIE & SIM CARD
13	USB_1
14	GigaLAN & USB_2 & OTG
15	PCI-E
16	SATA, SDIO, JTAG
17	CAN BUS
18	COM & M.2
19	I2S & Audio
20	SPI, I2C, LED, GPIO
21	BUTTON & FAN
22	EC
23	QSEVEN_MXM CONNECTOR

ROM-DB7502 A101-1 PCB: 19A6750200-01 BOM: 96967502000 DATE : 2017/01/09

1. Initial Release

ROM-DB7502 A102-1 PCB: 19A6750201-01 BOM: 96967502001 DATE : 2017/05/10

2017-04-18
P06. Change FS1 from 4A to 7A.
P06. Add C286/C287 1uF,add C288/C289 1nF,change R518/R520 from 2.2k to 22k,change R519/R521 from 4.03k to 39k.
P06. Change R297 from 47k to 240k.
P07. Stuff R165,Unstuff Q33/Q36/R184,add R577/R578.
P08. Change C44/C45 from 10uF to 22uF,add C290 close to C48.
P08. Add Q62,change R63 from8.2k to 47k.
P08. Change R81 from 62k to 130k,change R82 from 62k to 95.3k.
P09. Change C58 from 470nF to 1uF,change R93/R96 from 47k to 240k,add C291,change R96 circuit.
P09. Change R155 from 47k to 240k,change R122 from 1k to 100k.
P09. Change U37 pin7 connect from +VDC_SYS to +V12_DC_CHARGER.
P09. Unstuff R544/R545/R547/C278/C279/C280/C281/C282/Q60/U37.
P10. Change LVDS PU resistor form 1.24k to 22k/NL,change PD resistor form 750ohm to 12k/NL.
P10. Unstaff AC capacitor,add 0ohm resistor co-lay with AC capacitor.
P11. Change LVDS PU resistor form 1.24k to 22k/NL,change PD resistor form 750ohm to 12k/NL.
P11. Unstaff AC capacitor,add 0ohm resistor co-lay with AC capacitor.
P14. Add Q61/R553,change R7 from 1k to 0ohm.
P14. Delete D70,add D5.
P16. Change R49~R53 from 49.9k to 10k,change R41~R46 from 22ohm to 33ohm.
P19. Add R574 co-lay with R231,add C292 close to C143.
P19. Unstuff C171.
P19. Add R576.
P20. Change C117form 0603 0.1uF/NL to 0402 0.1uF
P22. Unstuff Q41/Q43,add C293/C294/D70/R579/R580/U39.
P23. Add R575 co-lay with R207.

2017-05-10
P03. Update Block Diagram,remove USB3.0 x1 & .RS232 pin box x1, add M.2 , MINI PCIE & I2C to GPIO.
P04. Update POWER BLOCK DIAGRAM.
P05. Update POWER ENABLE SEQUENCE.
P08. Add C410.
P09. Change ATATX1 from 2.54mm pitch to 2.0mm pitch.
P10. Change LVDS_BL1 from 2.54mm pitch to 2.0mm pitch.
P11. Change LVDS_BL2 from 2.54mm pitch to 2.0mm pitch.
P12. Add MINI PCIE circuit.
P13. Delete CN13(USB3.0 type A) & U32(USB PWR switch) circuit.
P15. Add R795/R821.
P16. Add U46 & U47 SDIO switch circuit.
P16. Change SATAPWR1 from pin header to pinbox,change SATADOM_PWR1 from 2.54mm pitch to 2.0mm pitch.
P18. Delete U2 & COM circuit.
P18. Add M.2 circuit.
P20. Change R36/R39 from 0402 to 0603, add I2C to GPIO circuit.
P21. Change CN9/CN10/CN11 from 2.54mm pitch to 2.0mm pitch.
P23. Delete R412~R415.

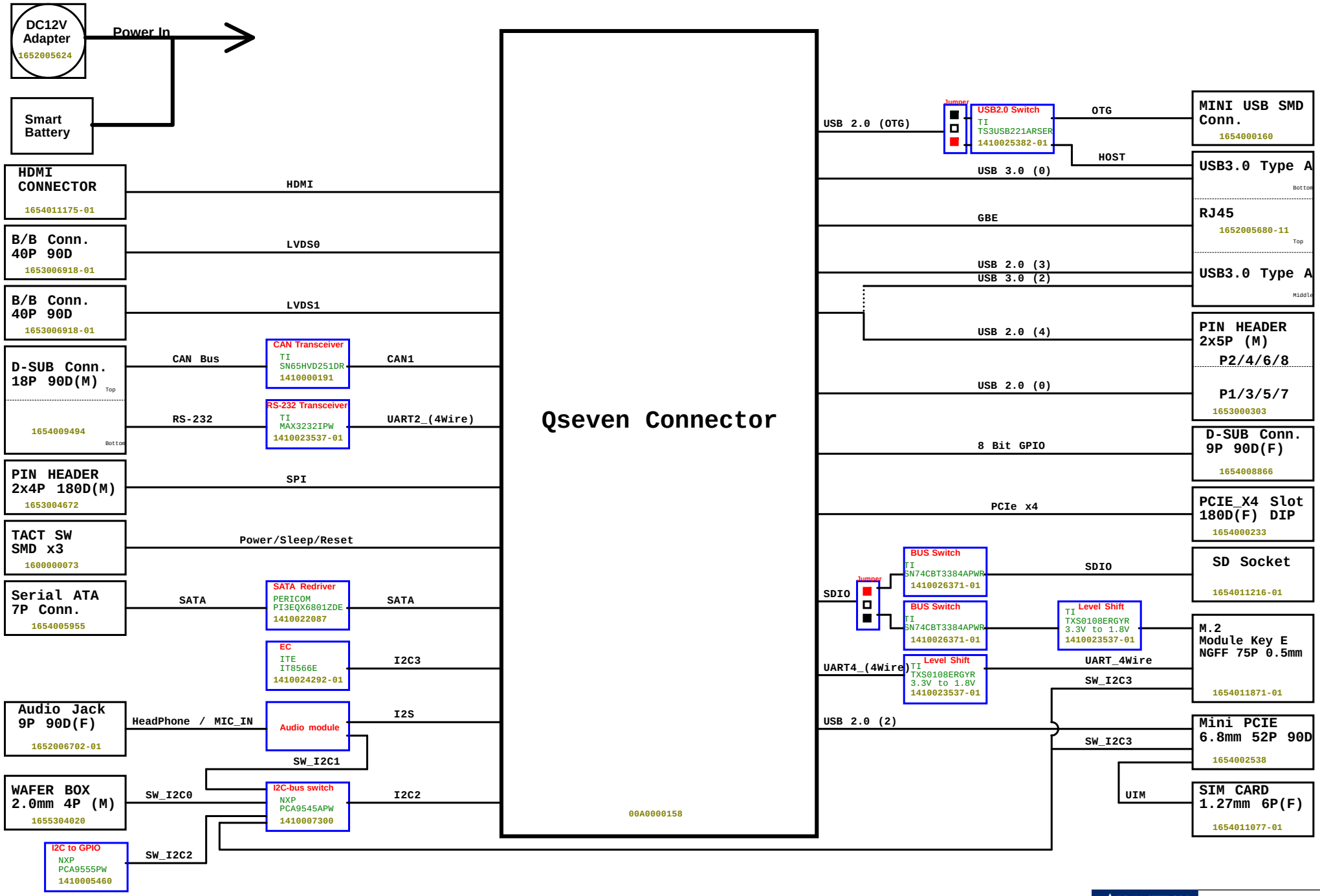

ADVANTECH

Title: BLOCK DIAGRAM

Size | Document Number: ROM-DB7502 | Rev: A102-1

Date: Tuesday, June 20, 2017 | Sheet 3 of 23

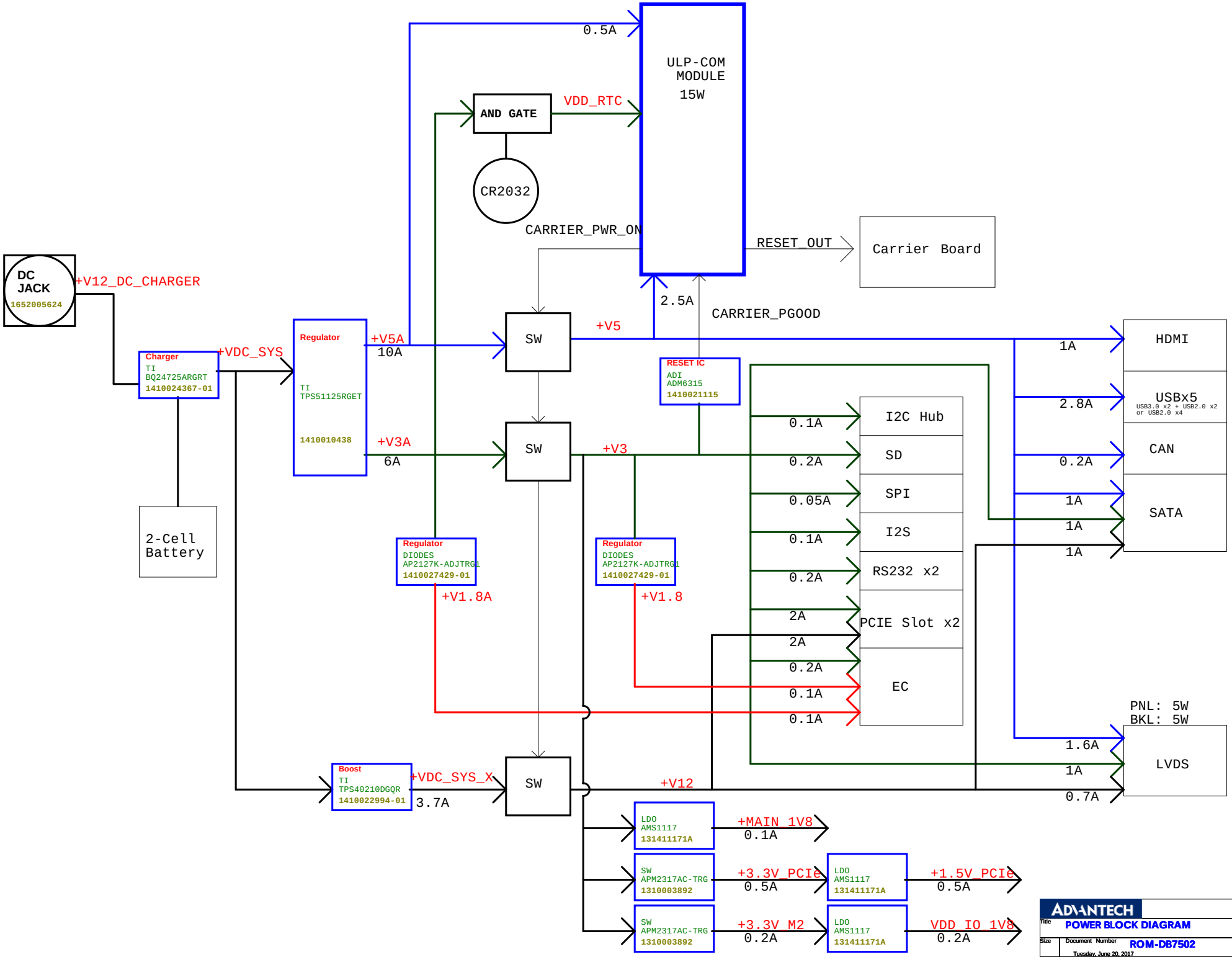

ADVANTECH

Title: POWER BLOCK DIAGRAM

Size | Document Number: ROM-DB7502 | Rev: A102-1

Date: Tuesday, June 20, 2017 | Sheet 4 of 23

ATX Mode

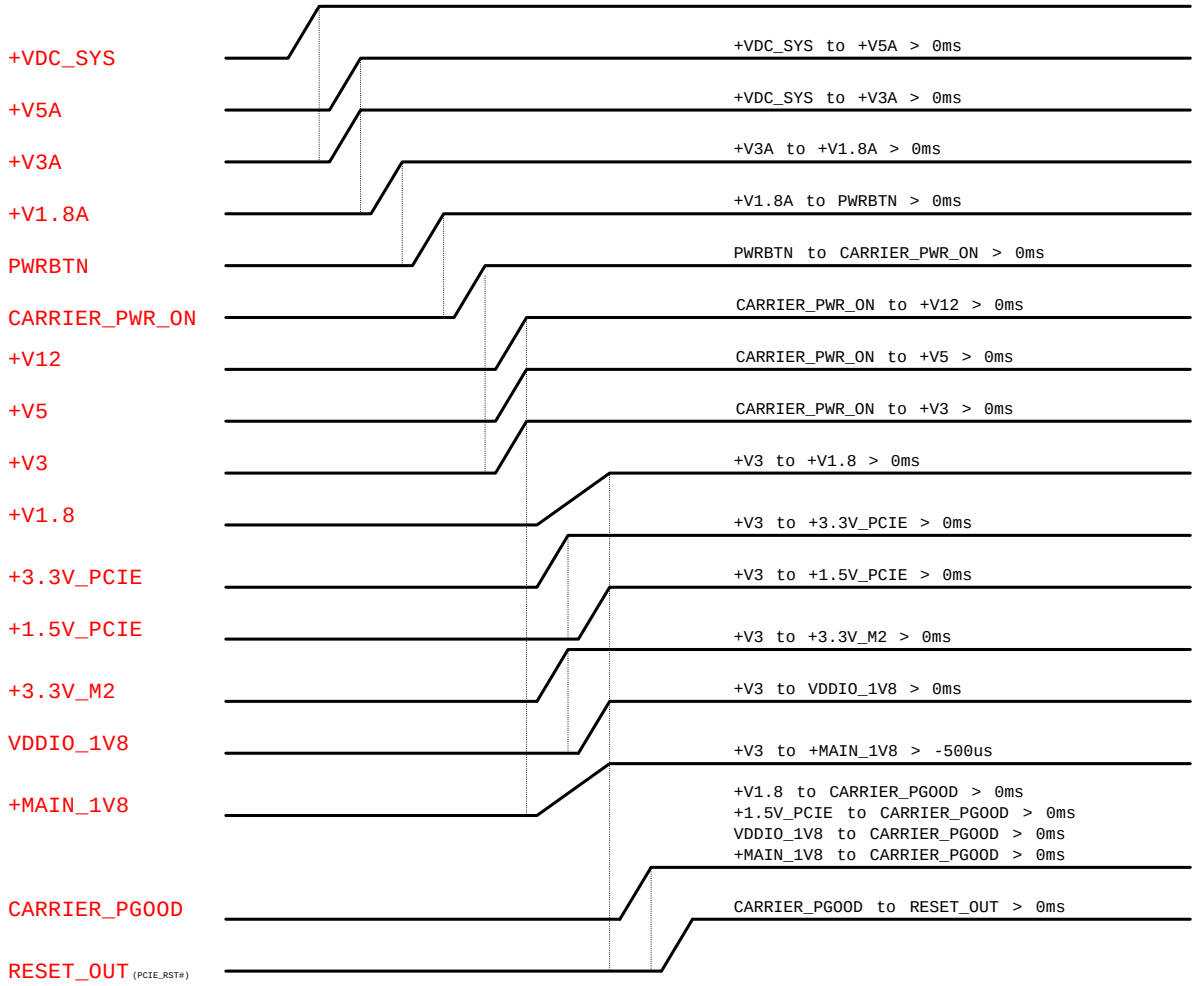

ADVANTECH		
Title	POWER ENABLE SEQUENCE	
Size	Document Number ROM-DB7502	Rev A102-1
Date: Tuesday, June 20, 2017	Sheet 5 of 23	

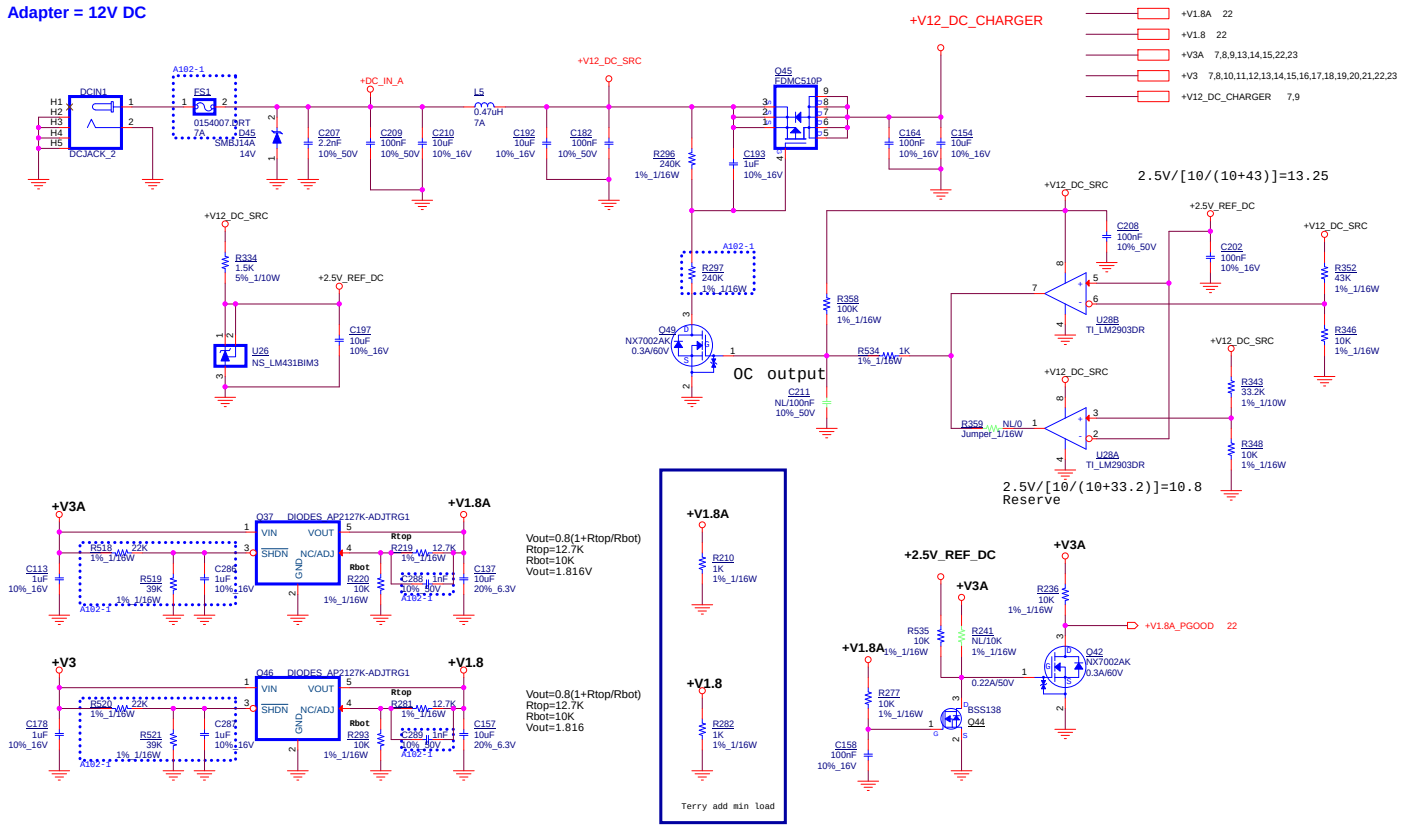

ADVANTECH		
Title	DC IN / +V1.8	
Size	Document Number ROM-DB7502	Rev A102-1
Date: Tuesday, June 20, 2017	Sheet 6 of 23	

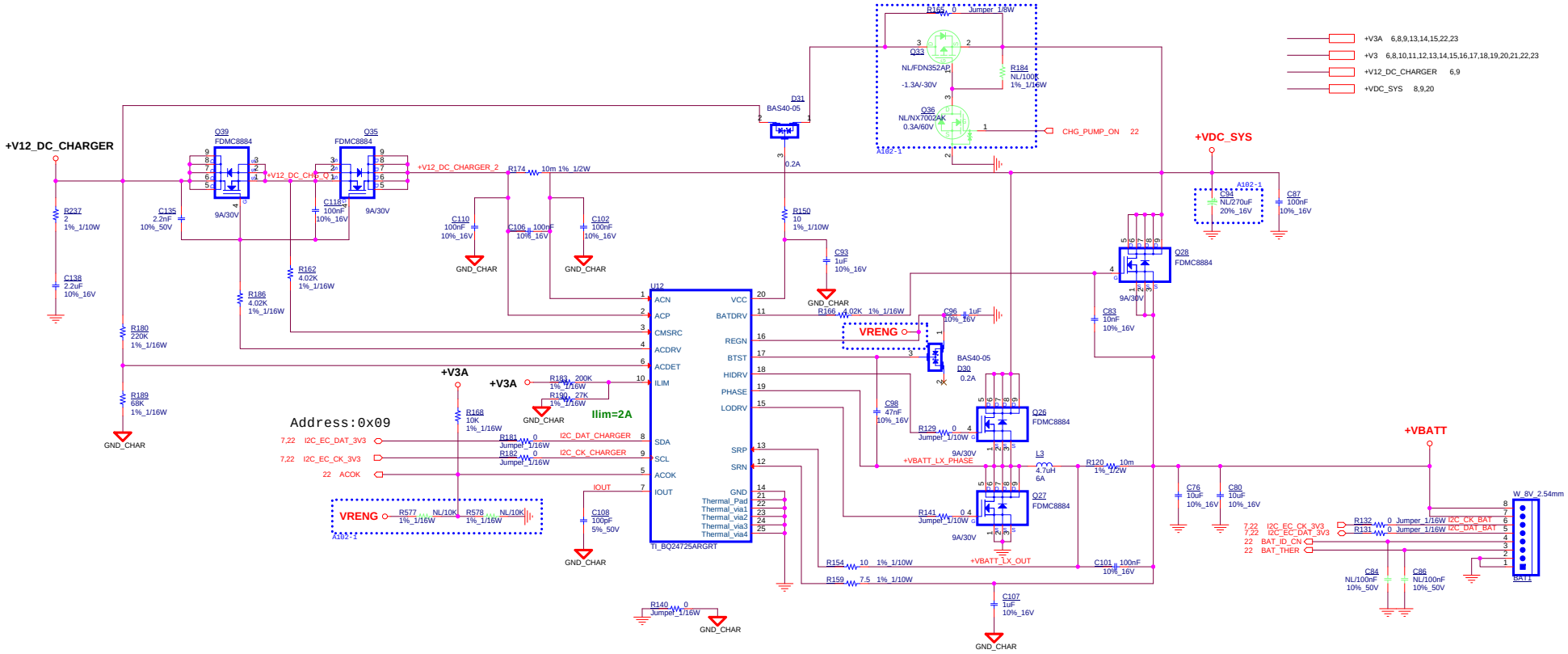

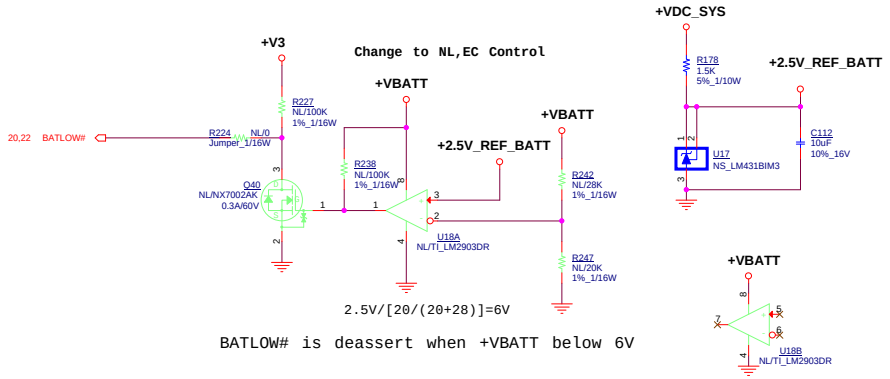

2.5V/[20/(20+28)]=6V

BATLOW# is deassert when +VBATT below 6V

ADVANTECH

Title	BATTERY CHARGER	
Size	Document Number ROM-DB7502	Rev A02-1
Date: Tuesday, June 20, 2017	Sheet 7 of 23	

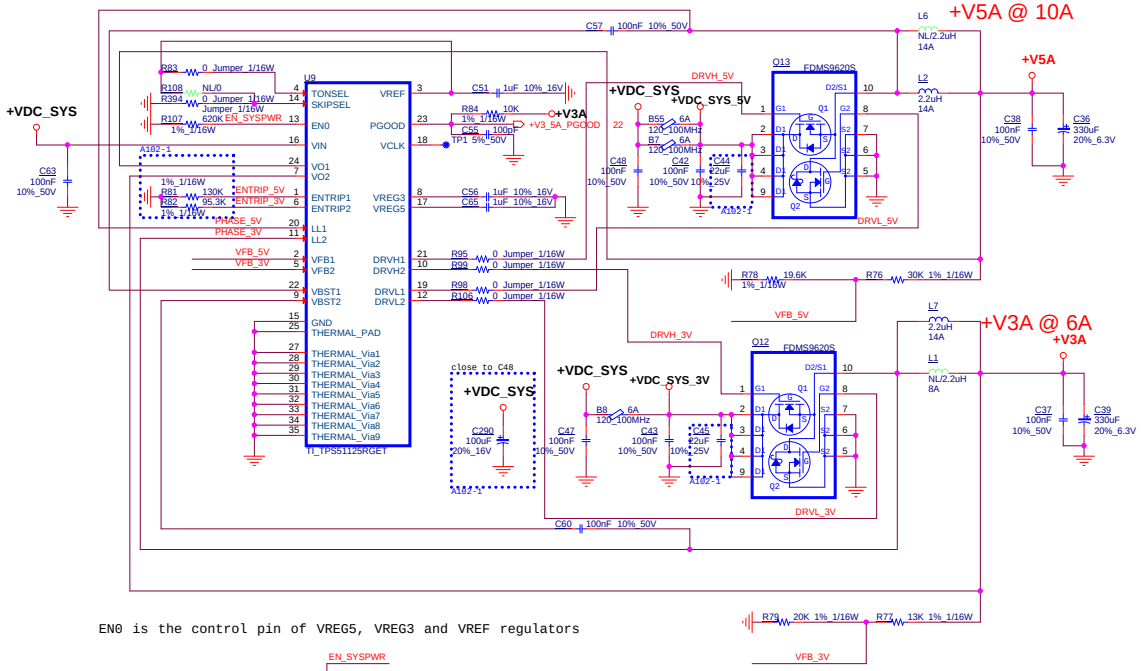

EN0 is the control pin of VREG5, VREG3 and VREG5 regulators

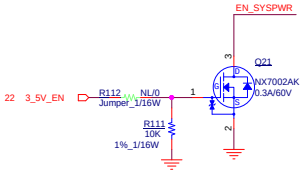

$$V_{TRIP}(mV) = \frac{R_{TRIP}(k\Omega) \times I_{TRIP}(\mu A)}{9} - 24\ (mV)$$

$$I_{OCP} = \frac{V_{TRIP}}{R_{DS(on)}} + \frac{I_{RIPPLE}}{2} = \frac{V_{TRIP}}{R_{DS(on)}} + \frac{1}{2 \times L \times f} \times \frac{(V_{IN} - V_{OUT}) \times V_{OUT}}{V_{IN}}$$

+V3A I limite ~ 6.78A +/- 10%
+V5A I limite ~ 6.78A +/- 10%

+V3 and +V5 Power On Circuit

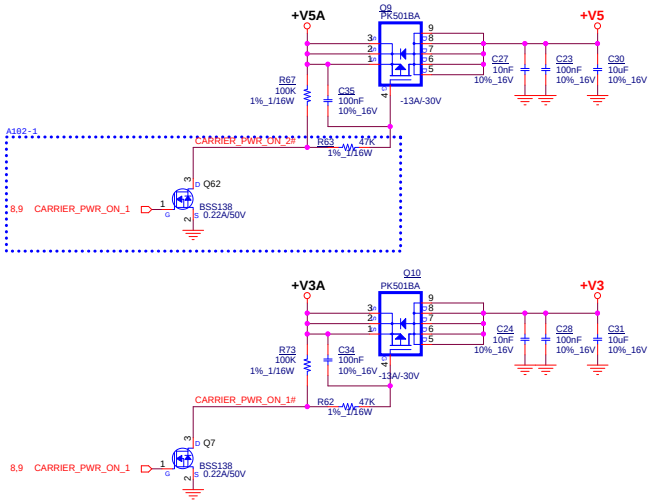

+V3 and +V5 Discharge Circuit

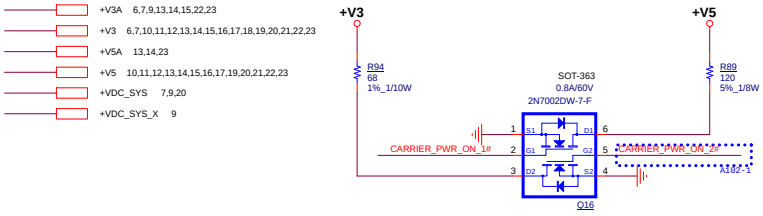

CARRIER_PGOOD

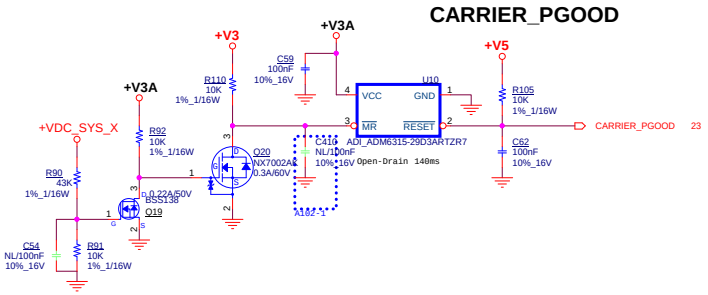

ADVANTECH			
Title	+V3A / +V5A / +V3 / +V5		
Size	Document Number ROM-DB7502		Rev A102-1
Date: Tuesday, June 20, 2017		Sheet 8 of 23	

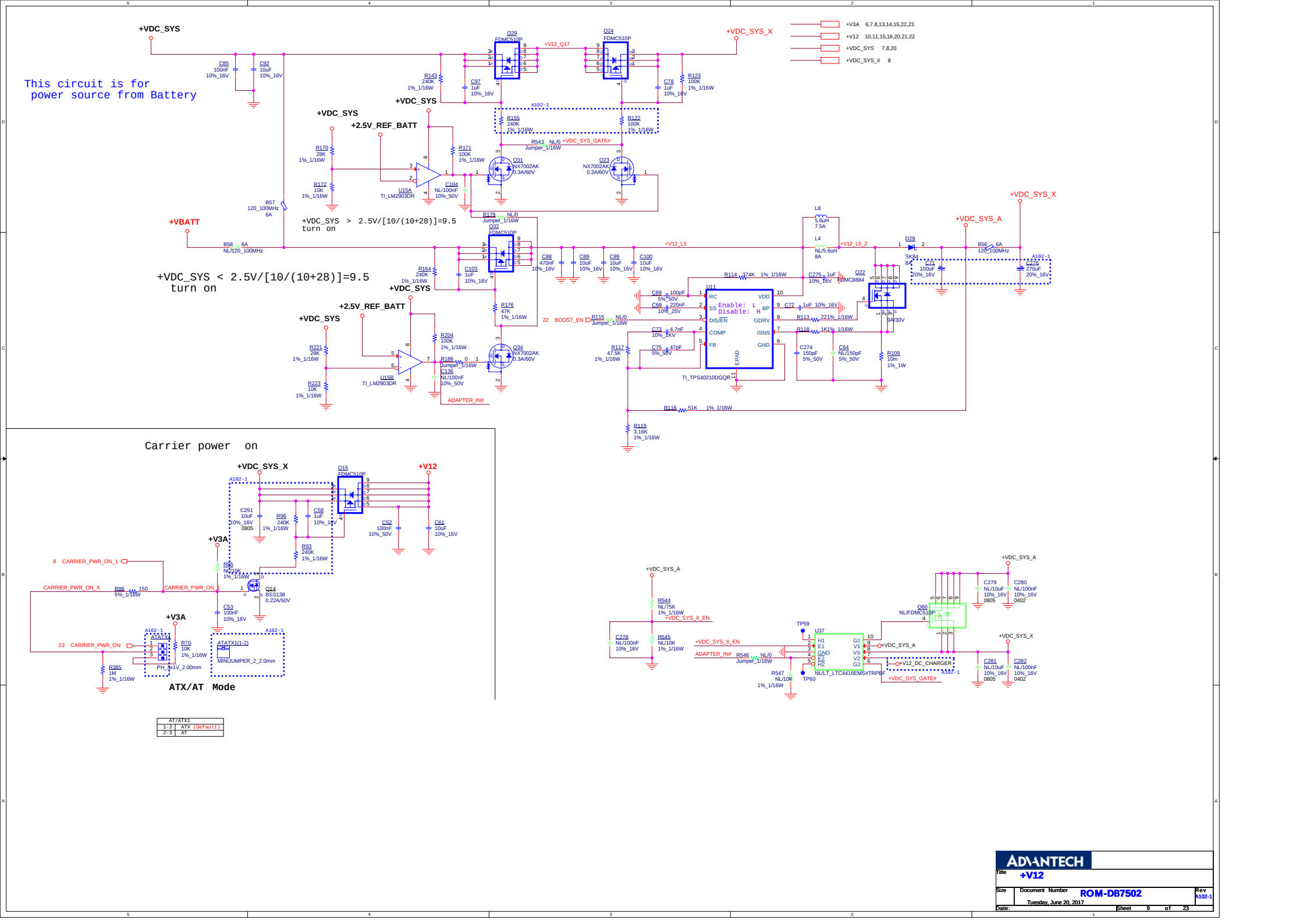
This circuit is for power source from Battery
+VDC_SYS
+VDC_SYS_X
+VBATT
+V12_Q17
+V12_L5
+VDC_SYS_A
+V3A 6,7,8,13,14,15,22,23
+V12 10,11,15,16,20,21,22
+VDC_SYS 7,8,20
+VDC_SYS_X 8
+VDC_SYS > 2.5V/[10/(10+28)]=9.5 turn on
+VDC_SYS < 2.5V/[10/(10+28)]=9.5 turn on
+2.5V_REF_BATT
Q29 FDMC510P
Q24 FDMC510P
Q32 FDMC510P
Q31 NX7002AK 0.3A/60V
Q23 NX7002AK 0.3A/60V
Q34 NX7002AK 0.3A/60V
U15A TI_LM2903DR
U15B TI_LM2903DR
U11 TI_TPS40210DGQR
Q22 FDMC8884
D29 SK84 8A
L8 5.6uH 7.5A
L4 NL/5.6uH 8A
B57 120_100MHz 6A
B58 6A NL/120_100MHz
B56 6A 120_100MHz
+VDC_SYS_EN
+VDC_SYS_X_EN
ADAPTER_IN#
+VDC_SYS_GATE#
+V12_DC_CHARGER
NL/LT_LTC4416EMS#TRPBF
Q60 NL/FDMC510P
U37
TP59
TP60
Carrier power on
+VDC_SYS_X
+V12
+V3A
Q15 FDMC510P
Q14 BSS138 0.22A/50V
CARRIER_PWR_ON_1
CARRIER_PWR_ON_X
CARRIER_PWR_ON
ATATX1
ATATX1(1-2)
MINIJUMPER_2_2.0mm
PH_1x1V_2.00mm
ATX/AT Mode
AT/ATX1
1-2 ATX (Default)
2-3 AT
ADVANTECH
Title +V12
Size
Document Number ROM-DB7502
Rev A102-1
Date: Tuesday, June 20, 2017
Sheet 9 of 23

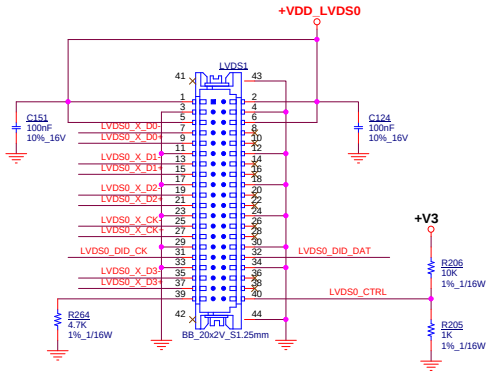

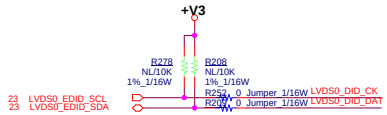

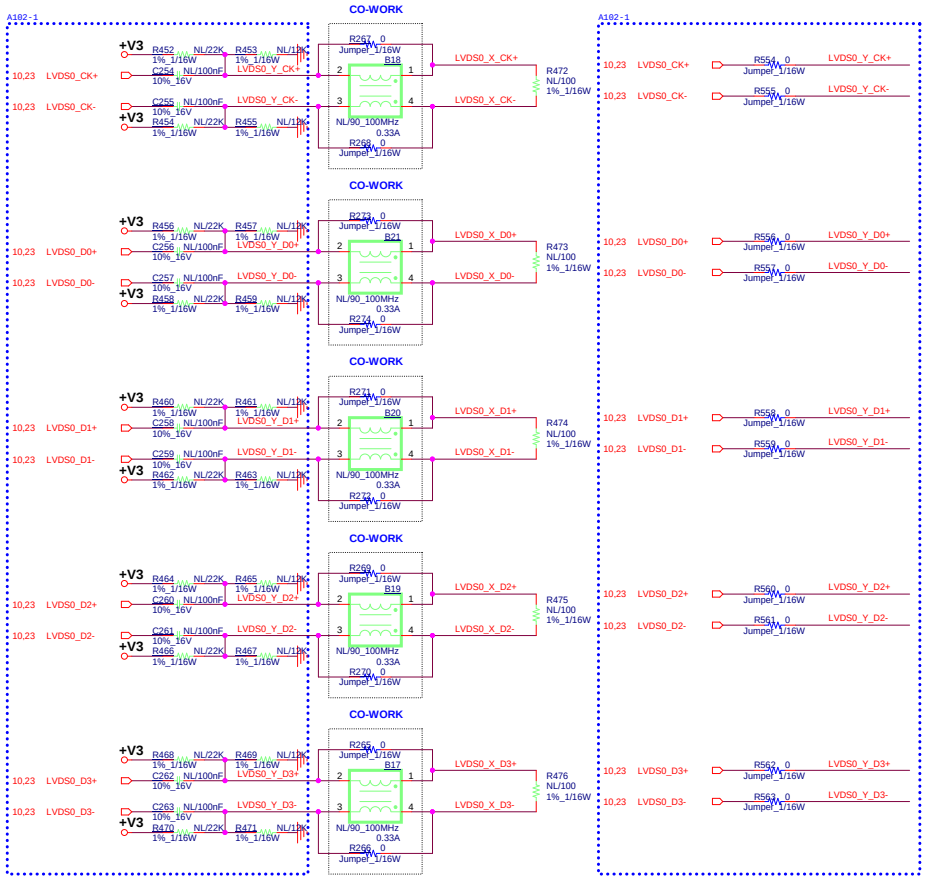

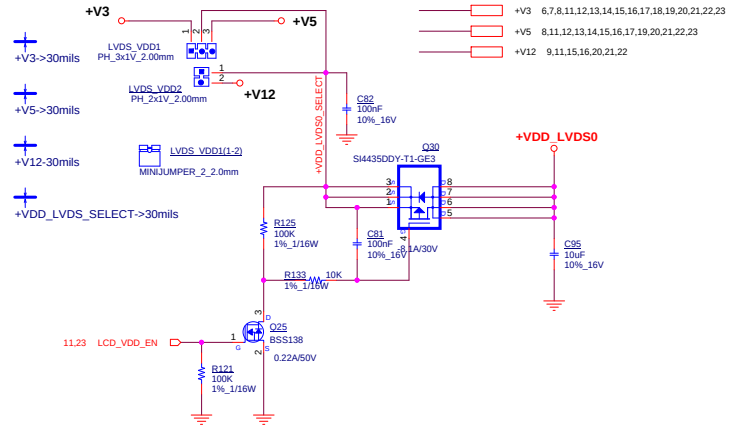

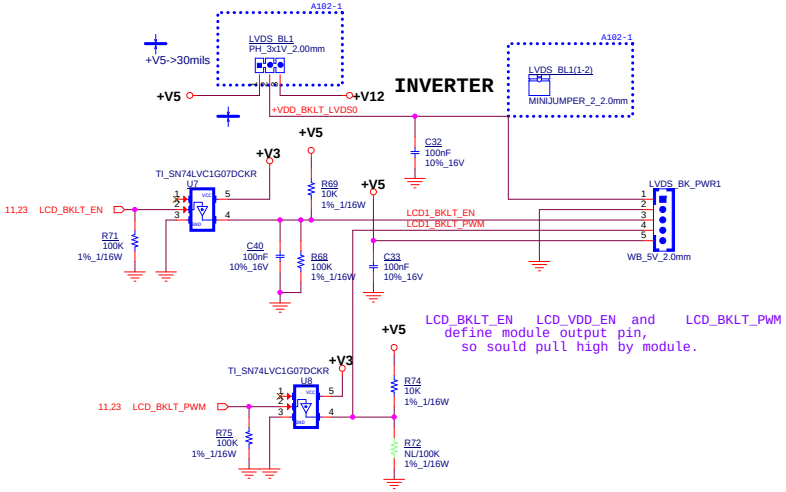

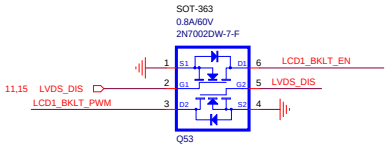

ADVANTECH

Title	LVDS0	
Size	Document Number ROM-DB7502	Rev A102-1
Date: Tuesday, June 20, 2017	Sheet 10 of 23	

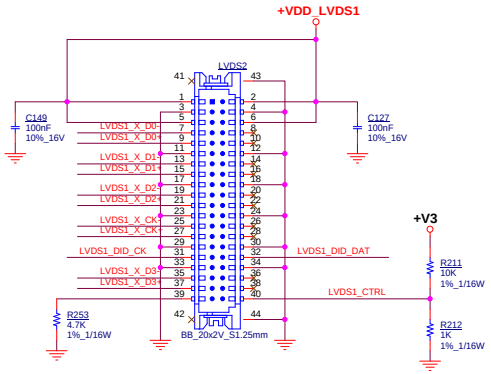

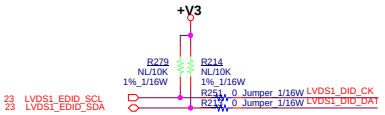

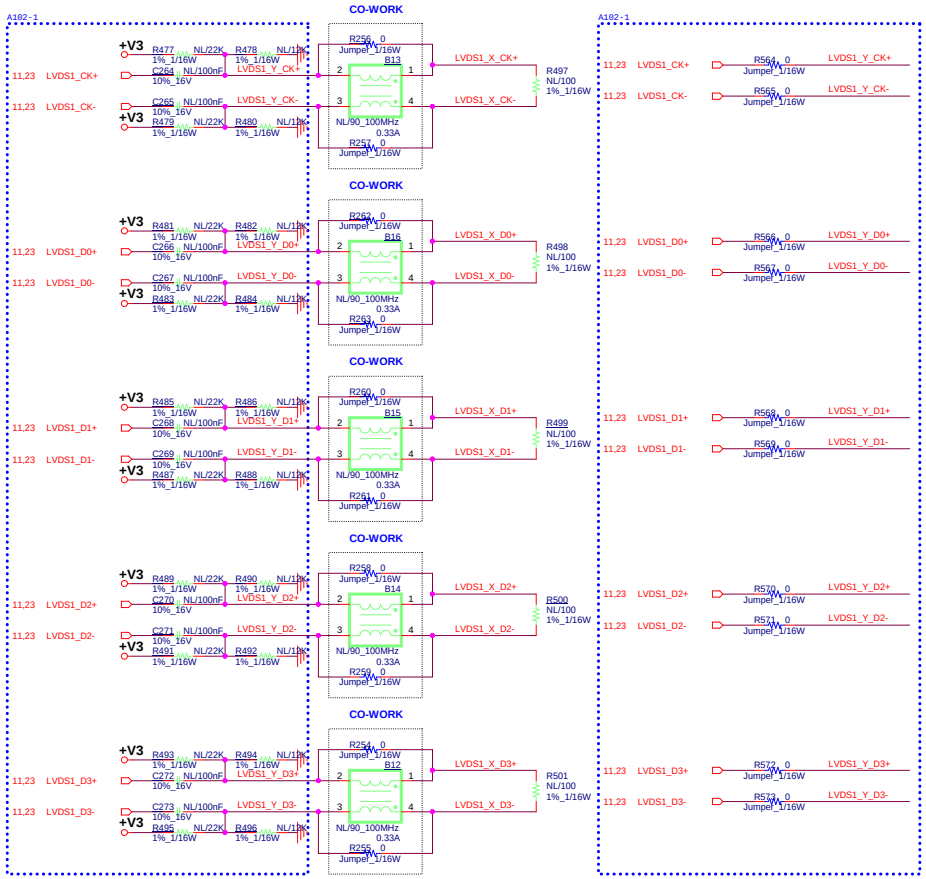

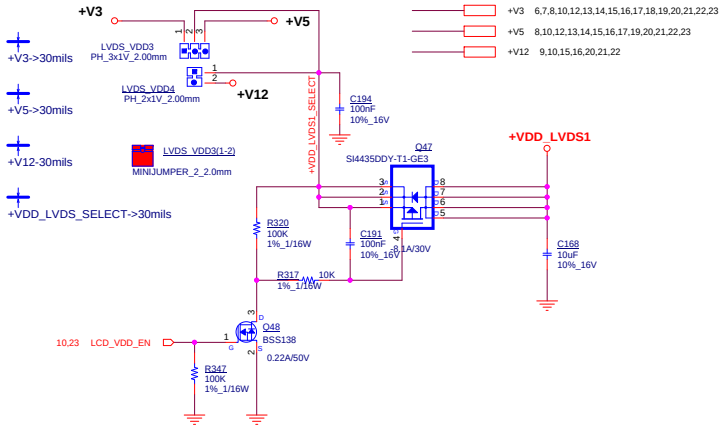

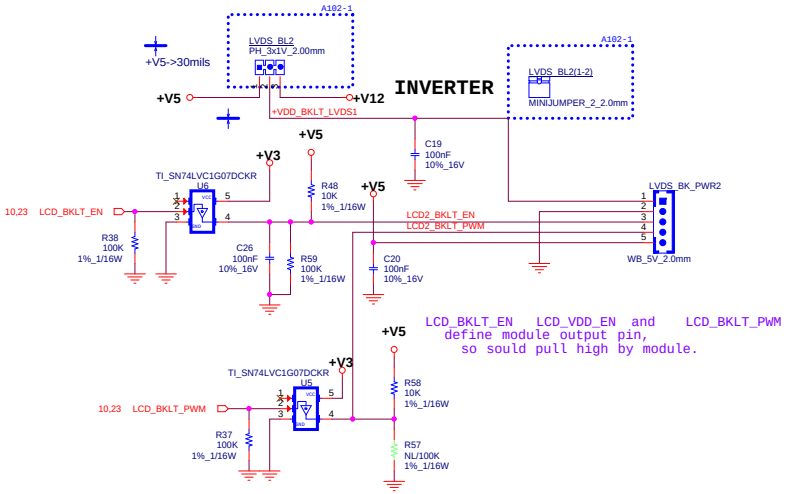

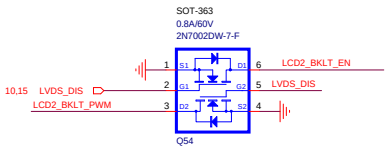

ADVANTECH

Title	LVDS1	
Size	Document Number ROM-DB7502	Rev A102-1
Date: Tuesday, June 20, 2017	Sheet 11 of 23	

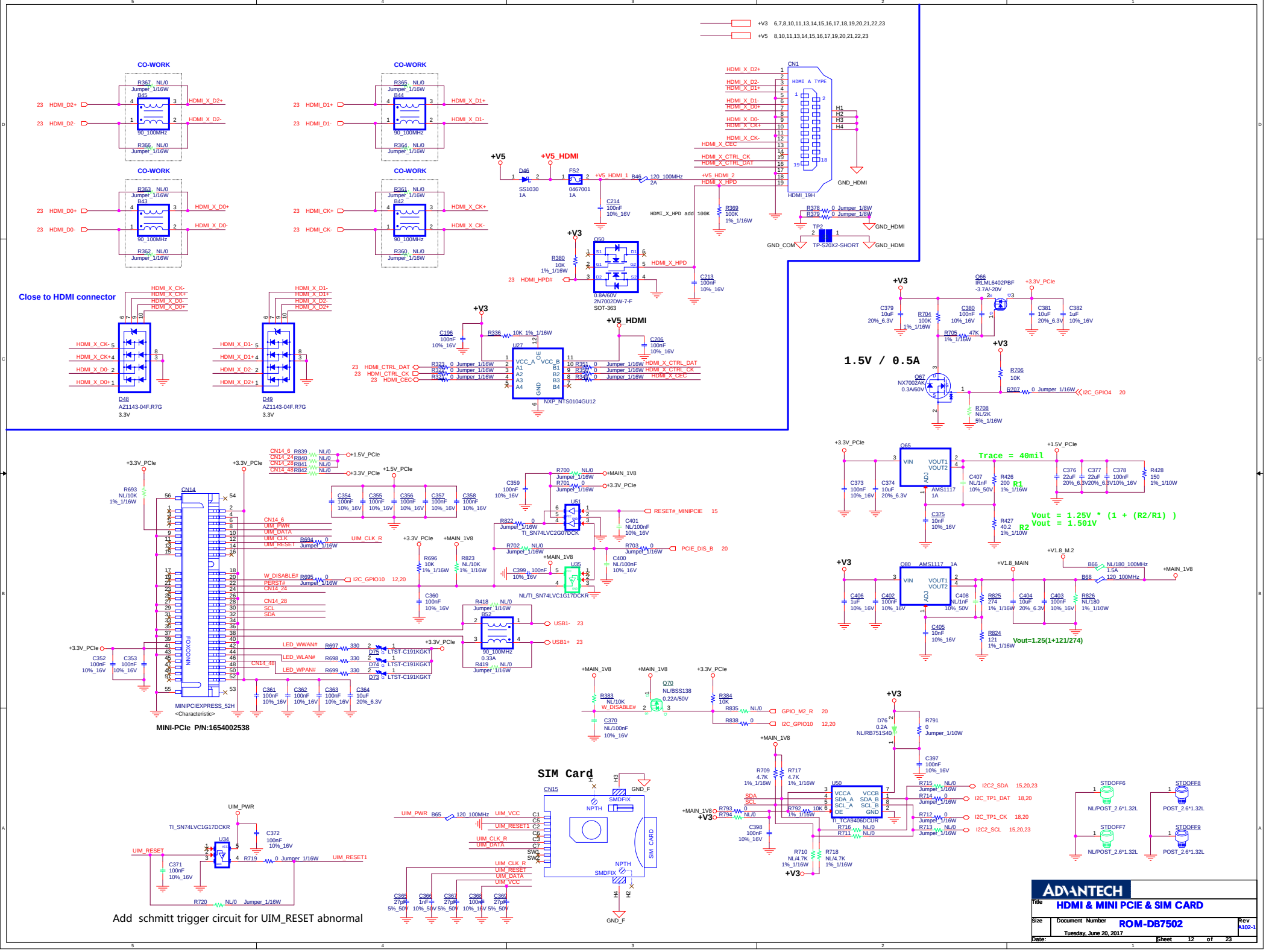
+V3 6,7,8,10,11,13,14,15,16,17,18,19,20,21,22,23
+V5 8,10,11,13,14,15,16,17,19,20,21,22,23
CO-WORK
R367 NL/0 Jumper_1/16W
B45
90_100MHz
R366 NL/0 Jumper_1/16W
23 HDMI_D2+
23 HDMI_D2-
HDMI_X_D2+
HDMI_X_D2-
R365 NL/0 Jumper_1/16W
B44
R364 NL/0 Jumper_1/16W
23 HDMI_D1+
23 HDMI_D1-
HDMI_X_D1+
HDMI_X_D1-
R363 NL/0 Jumper_1/16W
B43
R362 NL/0 Jumper_1/16W
23 HDMI_D0+
23 HDMI_D0-
HDMI_X_D0+
HDMI_X_D0-
R361 NL/0 Jumper_1/16W
B42
R360 NL/0 Jumper_1/16W
23 HDMI_CK+
23 HDMI_CK-
HDMI_X_CK+
HDMI_X_CK-
Close to HDMI connector
D48
AZ1143-04F.R7G
3.3V
D49
AZ1143-04F.R7G
3.3V
+V5
+V5_HDMI
D46
SS1030
1A
FS2
0467001
1A
+V5_HDMI_1
B46 120_100MHz 2A
C214 100nF 10%_16V
HDMI_X_HPD add 100K
R369 100K 1%_1/16W
+V5_HDMI_2
HDMI_X_HPD
CN1
HDMI A TYPE
HDMI_19H
GND_HDMI
R378 0 Jumper_1/8W
R379 0 Jumper_1/8W
TP2
TP-S20X2-SHORT
GND_COM
+V3
Q50
2N7002DW-7-F
SOT-363
R380 10K 1%_1/16W
23 HDMI_HPD#
HDMI_X_HPD
C213 100nF 10%_16V
C196 100nF 10%_16V
R336 10K 1%_1/16W
U27
NXP_N1S0104GU12
23 HDMI_CTRL_DAT
23 HDMI_CTRL_CK
23 HDMI_CEC
R333 0 Jumper_1/16W
R334 0 Jumper_1/16W
R335 0 Jumper_1/16W
R351 0 Jumper_1/16W
R352 0 Jumper_1/16W
R353 0 Jumper_1/16W
HDMI_X_CTRL_DAT
HDMI_X_CTRL_CK
HDMI_X_CEC
C206 100nF 10%_16V
Q66
IRLML6402PBF
-3.7A/-20V
+3.3V_PCIe
C379 10uF 20%_6.3V
R704 100K 1%_1/16W
C380 100nF 10%_16V
C381 10uF 20%_6.3V
C382 1uF 10%_16V
R705 47K 1%_1/16W
1.5V / 0.5A
Q67
NX7002AK
0.3A/60V
R706 10K
R707 0 Jumper_1/16W
I2C_GPIO4 20
R708 NL/2K 5%_1/16W
CN14
FOXCONN
MINIPCIEXPRESS_52H
<Characteristic>
MINI-PCIe P/N:1654002538
+3.3V_PCIe
+1.5V_PCIe
CN14_6 R839 NL/0
CN14_24 R840 NL/0
CN14_28 R841 NL/0
CN14_48 R842 NL/0
R693 NL/10K 1%_1/16W
C354 100nF 10%_16V
C355 100nF 10%_16V
C356 100nF 10%_16V
C357 100nF 10%_16V
C358 100nF 10%_16V
CN14_6
UIM_PWR
UIM_DATA
UIM_CLK
UIM_RESET
R694 0 Jumper_1/16W
UIM_CLK_R
W_DISABLE#
R695 0 Jumper_1/16W
I2C_GPIO10 12,20
PERST#
CN14_24
CN14_28
SCL
SDA
CN14_48
LED_WWAN# R697 330
LED_WLAN# R698 330
LED_WPAN# R699 330
D75 LTST-C191KGKT
D74 LTST-C191KGKT
D73 LTST-C191KGKT
C352 100nF 10%_16V
C353 100nF 10%_16V
C361 100nF 10%_16V
C362 100nF 10%_16V
C363 100nF 10%_16V
C364 10uF 20%_6.3V
R696 10K 1%_1/16W
R823 NL/10K 1%_1/16W
C360 100nF 10%_16V
+MAIN_1V8
C359 100nF 10%_16V
R700 NL/0 Jumper_1/16W
R701 0 Jumper_1/16W
U51
TI_SN74LVC2G07DCK
RESET#_MINIPCIE 15
R822 0 Jumper_1/16W
C401 NL/100nF 10%_16V
R702 NL/0 Jumper_1/16W
R703 0 Jumper_1/16W
PCIE_DIS_B 20
C399 100nF 10%_16V
U35
NL/TI_SN74LVC1G17DCKR
C400 NL/100nF 10%_16V
R418 NL/0 Jumper_1/16W
B52
90_100MHz 0.33A
R419 NL/0 Jumper_1/16W
USB1- 23
USB1+ 23
+3.3V_PCIe
+1.5V_PCIe
Trace = 40mil
Q65
AMS1117 1A
C373 100nF 10%_16V
C374 10uF 20%_6.3V
C407 NL/1nF 10%_50V
R426 200 1%_1/16W
R1
C376 22uF 20%_6.3V
C377 22uF 20%_6.3V
C378 100nF 10%_16V
R428 150 1%_1/10W
C375 10nF 10%_16V
R427 40.2 1%_1/10W
R2
Vout = 1.25V * (1 + (R2/R1))
Vout = 1.501V
+V3
Q80 AMS1117 1A
+V1.8_MAIN
+V1.8_M.2
B66 NL/180_100MHz
B68 1.5A 120_100MHz
+MAIN_1V8
C406 1uF 10%_16V
C402 100nF 10%_16V
C408 NL/1nF 10%_50V
R825 274 1%_1/16W
C404 10uF 20%_6.3V
C403 100nF 10%_16V
R826 NL/180 1%_1/10W
C405 10nF 10%_16V
R824 121 1%_1/16W
Vout=1.25(1+121/274)
+MAIN_1V8
+3.3V_PCIe
R383 NL/10K W_DISABLE#
Q70 NL/BSS138 0.22A/50V
R384 10K
R835 NL/0
GPIO_M2_R 20
R838 0
I2C_GPIO10 12,20
C370 NL/100nF 10%_16V
+V3
D76 0.2A NL/RB751S40
R791 0 Jumper_1/10W
C397 100nF 10%_16V
+MAIN_1V8
R709 4.7K 1%_1/16W
R717 4.7K 1%_1/16W
SDA
SCL
R793 0
R794 NL/0
C398 100nF 10%_16V
U50
TI_TCA9406DCUR
VCCA
SDA_A
SCL_A
OE
VCCB
SDA_B
SCL_B
GND
R792 10K 1%_1/16W
R716 NL/0
R711 NL/0
R710 NL/4.7K 1%_1/16W
R718 NL/4.7K 1%_1/16W
R715 NL/0 Jumper_1/16W
R714 0 Jumper_1/16W
R712 0 Jumper_1/16W
R713 NL/0 Jumper_1/16W
I2C2_SDA 15,20,23
I2C_TP1_DAT 18,20
I2C_TP1_CK 18,20
I2C2_SCL 15,20,23
SIM Card
CN15
SMDFIX
NPTH
GND_F
SIM_CARD
UIM_PWR B65 120_100MHz
UIM_VCC
UIM_RESET1
UIM_CLK_R
UIM_DATA
SWI
SWO
C365 27pF 5%_50V
C366 1nF 10%_50V
C367 27pF 5%_50V
C368 100nF 10%_16V
C369 27pF 5%_50V
TI_SN74LVC1G17DCKR
U34
C372 100nF 10%_16V
C371 100nF 10%_16V
R719 0 Jumper_1/16W
R720 NL/0 Jumper_1/16W
Add schmitt trigger circuit for UIM_RESET abnormal
STDOFF6
NL/POST_2.6*1.32L
STDOFF7
NL/POST_2.6*1.32L
STDOFF8
POST_2.6*1.32L
STDOFF9
POST_2.6*1.32L
ADVANTECH
Title HDMI & MINI PCIE & SIM CARD
Size
Document Number ROM-DB7502
Rev A102-1
Date: Tuesday, June 20, 2017
Sheet 12 of 23

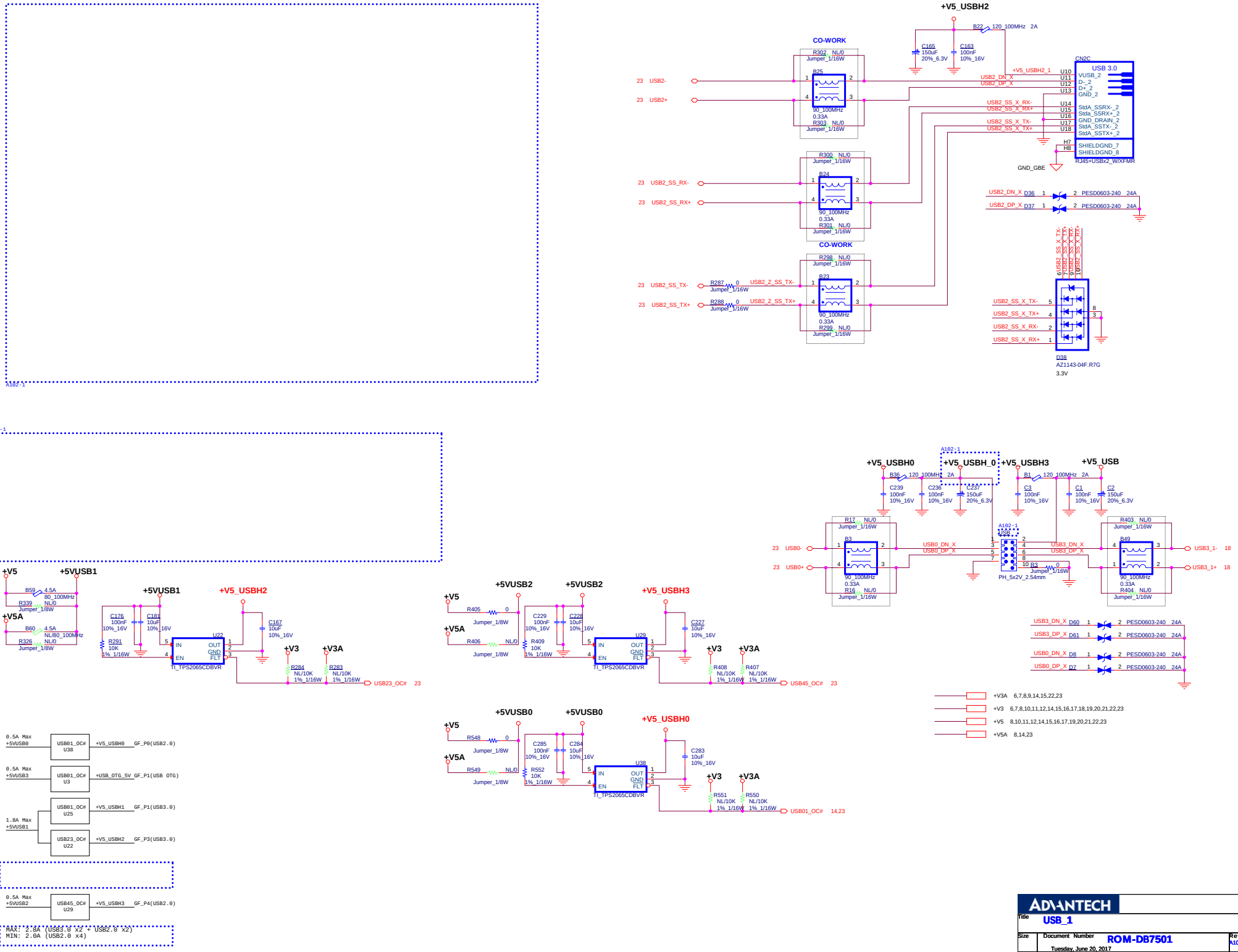
+V5_USBH2
B22 120_100MHz 2A
C165 150uF 20%_6.3V
C163 100nF 10%_16V
CO-WORK
R302 NL/0 Jumper_1/16W
B25
90_100MHz 0.33A
R303 NL/0 Jumper_1/16W
23 USB2-
23 USB2+
CN2C
USB 3.0
VUSB_2
D-_2
D+_2
GND_2
+V5_USBH2_1
USB2_DN_X
USB2_DP_X
USB2_SS_X_RX-
USB2_SS_X_RX+
USB2_SS_X_TX-
USB2_SS_X_TX+
StdA_SSRX-_2
Stda_SSRX+_2
GND_DRAIN_2
StdA_SSTX-_2
StdA_SSTX+_2
SHIELDGND_7
SHIELDGND_8
RJ45+USBx2_W/XFMR
GND_GBE
R300 NL/0 Jumper_1/16W
B24
90_100MHz 0.33A
R301 NL/0 Jumper_1/16W
23 USB2_SS_RX-
23 USB2_SS_RX+
USB2_DN_X D36 PESD0603-240 24A
USB2_DP_X D37 PESD0603-240 24A
CO-WORK
R298 NL/0 Jumper_1/16W
B23
90_100MHz 0.33A
R299 NL/0 Jumper_1/16W
23 USB2_SS_TX-
23 USB2_SS_TX+
R287 0 Jumper_1/16W
R288 0 Jumper_1/16W
USB2_Z_SS_TX-
USB2_Z_SS_TX+
D38
AZ1143-04F.R7G
3.3V
A102-1
+V5_USBH0
+V5_USBH_0
+V5_USBH3
+V5_USB
B36 120_100MHz 2A
B1 120_100MHz 2A
C239 100nF 10%_16V
C236 100nF 10%_16V
C237 150uF 20%_6.3V
C3 100nF 10%_16V
C1 100nF 10%_16V
C2 150uF 20%_6.3V
R17 NL/0 Jumper_1/16W
B3
90_100MHz 0.33A
R16 NL/0 Jumper_1/16W
23 USB0-
23 USB0+
USB0_DN_X
USB0_DP_X
USB3_DN_X
USB3_DP_X
R3 0 Jumper_1/16W
PH_5x2V_2.54mm
R403 NL/0 Jumper_1/16W
B49
90_100MHz 0.33A
R404 NL/0 Jumper_1/16W
USB3_1- 18
USB3_1+ 18
USB3_DN_X D60 PESD0603-240 24A
USB3_DP_X D61 PESD0603-240 24A
USB0_DN_X D8 PESD0603-240 24A
USB0_DP_X D7 PESD0603-240 24A
+V5 +5VUSB1
B59 4.5A 80_100MHz
R339 NL/0 Jumper_1/8W
+V5A
B60 4.5A NL/80_100MHz
R326 NL/0 Jumper_1/8W
+5VUSB1
+V5_USBH2
C176 100nF 10%_16V
C181 10uF 10%_16V
R291 10K 1%_1/16W
U22
IN OUT GND EN FLT
TI_TPS2065CDBVR
C167 10uF 10%_16V
+V3 +V3A
R284 NL/10K 1%_1/16W
R283 NL/10K 1%_1/16W
USB23_OC# 23
+5VUSB2 +5VUSB2
+V5_USBH3
+V5
R405 0 Jumper_1/8W
+V5A
R406 NL/0 Jumper_1/8W
C229 100nF 10%_16V
C228 10uF 10%_16V
R409 10K 1%_1/16W
U29
TI_TPS2065CDBVR
C227 10uF 10%_16V
R408 NL/10K 1%_1/16W
R407 NL/10K 1%_1/16W
USB45_OC# 23
+V3A
+V3
+V5A 8,14,23
+V5 8,10,11,12,14,15,16,17,19,20,21,22,23
+V3 6,7,8,10,11,12,14,15,16,17,18,19,20,21,22,23
+V3A 6,7,8,9,14,15,22,23
+5VUSB0 +5VUSB0
+V5_USBH0
+V5
R548 0 Jumper_1/8W
+V5A
R549 NL/0 Jumper_1/8W
C285 100nF 10%_16V
C284 10uF 10%_16V
R552 10K 1%_1/16W
U38
TI_TPS2065CDBVR
C283 10uF 10%_16V
R551 NL/10K 1%_1/16W
R550 NL/10K 1%_1/16W
USB01_OC# 14,23
0.5A Max +5VUSB0
USB01_OC# U38
+V5_USBH0 GF_P0(USB2.0)
0.5A Max +5VUSB3
USB01_OC# U3
+USB_OTG_5V GF_P1(USB OTG)
1.8A Max +5VUSB1
USB01_OC# U25
+V5_USBH1 GF_P1(USB3.0)
USB23_OC# U22
+V5_USBH2 GF_P3(USB3.0)
0.5A Max +5VUSB2
USB45_OC# U29
+V5_USBH3 GF_P4(USB2.0)
MAX: 2.8A (USB3.0 X2 + USB2.0 X2)
MIN: 2.0A (USB2.0 x4)
ADVANTECH
Title USB_1
Size
Document Number ROM-DB7501
Rev A102-1
Tuesday, June 20, 2017
Date:
Sheet 13 of 23

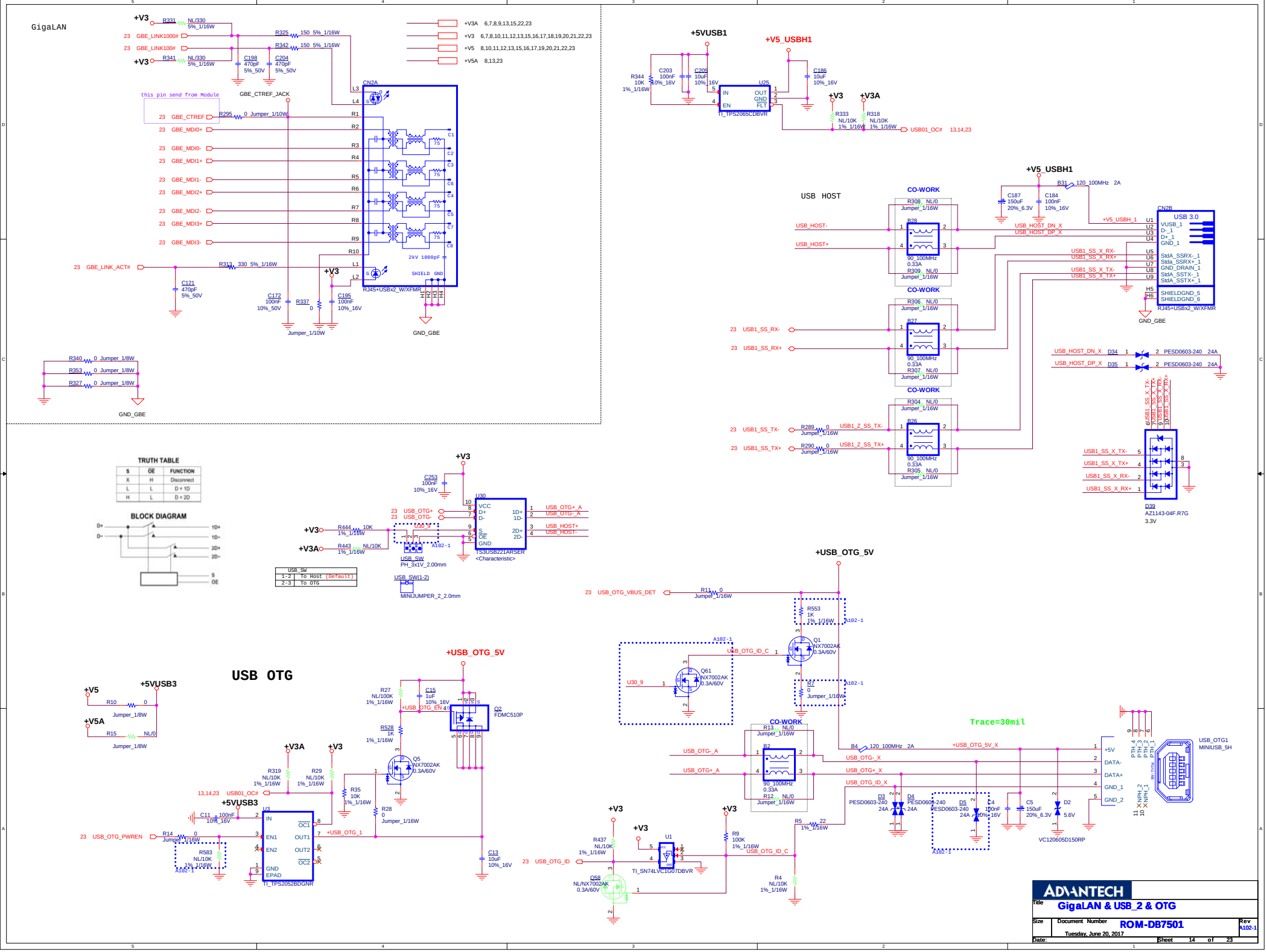
GigaLAN
+V3
R331 NL/330 5%_1/16W
23 GBE_LINK1000#
23 GBE_LINK100#
R341 NL/330 5%_1/16W
R325 150 5% 1/16W
R342 150 5% 1/16W
C198 470pF 5%_50V
C204 470pF 5%_50V
GBE_CTREF_JACK
this pin send from Module
23 GBE_CTREF
R295 0 Jumper_1/10W
23 GBE_MDI0+
23 GBE_MDI0-
23 GBE_MDI1+
23 GBE_MDI1-
23 GBE_MDI2+
23 GBE_MDI2-
23 GBE_MDI3+
23 GBE_MDI3-
23 GBE_LINK_ACT#
R313 330 5% 1/16W
C121 470pF 5%_50V
C172 100nF 10%_50V
R337 0
C195 100nF 10%_16V
Jumper_1/10W
CN2A
RJ45+USBx2_W/XFMR
2kV 1000pF
SHIELD GND
GND_GBE
+V3A 6,7,8,9,13,15,22,23
+V3 6,7,8,10,11,12,13,15,16,17,18,19,20,21,22,23
+V5 8,10,11,12,13,15,16,17,19,20,21,22,23
+V5A 8,13,23
R340 0 Jumper_1/8W
R353 0 Jumper_1/8W
R327 0 Jumper_1/8W
GND_GBE
+5VUSB1
R344 10K 1%_1/16W
C203 100nF 10%_16V
C205 10uF 10%_16V
U25
IN OUT GND EN FLT
TI_TPS2065CDBVR
+V5_USBH1
C186 10uF 10%_16V
+V3
+V3A
R333 NL/10K 1%_1/16W
R318 NL/10K 1%_1/16W
USB01_OC# 13,14,23
USB HOST
+V5_USBH1
B31 120_100MHz 2A
C187 150uF 20%_6.3V
C184 100nF 10%_16V
CO-WORK
R308 NL/0 Jumper_1/16W
B28
90_100MHz 0.33A
R309 NL/0 Jumper_1/16W
USB_HOST-
USB_HOST+
USB_HOST_DN_X
USB_HOST_DP_X
+V5_USBH1
CN2B
USB 3.0
VUSB_1
D-_1
D+_1
GND_1
StdA_SSRX-_1
StdA_SSRX+_1
GND_DRAIN_1
StdA_SSTX-_1
StdA_SSTX+_1
SHIELDGND_5
SHIELDGND_6
RJ45+USBx2_W/XFMR
GND_GBE
USB1_SS_X_RX-
USB1_SS_X_RX+
USB1_SS_X_TX-
USB1_SS_X_TX+
CO-WORK
R306 NL/0 Jumper_1/16W
B27
90_100MHz 0.33A
R307 NL/0 Jumper_1/16W
23 USB1_SS_RX-
23 USB1_SS_RX+
USB_HOST_DN_X D34 PESD0603-240 24A
USB_HOST_DP_X D35 PESD0603-240 24A
CO-WORK
R304 NL/0 Jumper_1/16W
B26
90_100MHz 0.33A
R305 NL/0 Jumper_1/16W
23 USB1_SS_TX-
23 USB1_SS_TX+
R289 0 Jumper_1/16W
R290 0 Jumper_1/16W
USB1_Z_SS_TX-
USB1_Z_SS_TX+
USB1_SS_X_TX-
USB1_SS_X_TX+
USB1_SS_X_RX-
USB1_SS_X_RX+
D39
AZ1143-04F.R7G
3.3V
TRUTH TABLE
S OE FUNCTION
X H Disconnect
L L D = 1D
H L D = 2D
BLOCK DIAGRAM
D+ D- 1D+ 1D- 2D+ 2D- S OE
+V3
C253 100nF 10%_16V
U30
VCC D+ D- S OE GND
1D+ 1D- 2D+ 2D-
TS3USB221ARSER
<Characteristic>
23 USB_OTG+
23 USB_OTG-
USB_OTG+_A
USB_OTG-_A
USB_HOST+
USB_HOST-
+V3
+V3A
R444 10K 1%_1/16W
R443 NL/10K 1%_1/16W
A102-1
USB_SW
PH_3x1V_2.00mm
USB_SW(1-2)
MINIJUMPER_2_2.0mm
USB_SW
1-2 To Host (Default)
2-3 To OTG
+USB_OTG_5V
23 USB_OTG_VBUS_DET
R11 0 Jumper_1/16W
R553 1K 1% 1/16W
A102-1
Q1 NX7002AK 0.3A/60V
USB_OTG_ID_C
Q61 NX7002AK 0.3A/60V
U30_9
R7 0 Jumper_1/16W
USB OTG
+V5
+5VUSB3
R10 0 Jumper_1/8W
+V5A
R15 NL/0 Jumper_1/8W
R27 NL/100K 1%_1/16W
C15 1uF 10%_16V
+USB_OTG_EN 45
Q2 FDMC510P
R528 1K 1%_1/16W
Q5 NX7002AK 0.3A/60V
+V3A
+V3
R319 NL/10K 1%_1/16W
R29 NL/10K 1%_1/16W
R35 10K 1%_1/16W
R28 0 Jumper_1/16W
13,14,23 USB01_OC#
+5VUSB3
C11 100nF 10%_16V
U3
IN EN1 EN2 GND EPAD OC1 OUT1 OUT2 OC2
TI_TPS2052BDGNR
23 USB_OTG_PWREN
R14 0 Jumper_1/16W
R583 NL/10K 1%_1/16W
A102-1
+USB_OTG_1
C13 10uF 10%_16V
CO-WORK
R13 NL/0 Jumper_1/16W
B2
90_100MHz 0.33A
R12 NL/0 Jumper_1/16W
USB_OTG-_A
USB_OTG+_A
B4 120_100MHz 2A
+USB_OTG_5V_X
USB_OTG-_X
USB_OTG+_X
USB_OTG_ID_X
Trace=30mil
D3 PESD0603-240 24A
D4 PESD0603-240 24A
D5 PESD0603-240 24A
C4 100nF 20%_16V
C5 150uF 20%_6.3V
D2 5.6V
VC120605D150RP
A102-1
USB_OTG1
MINIUSB_5H
+V3
R437 NL/10K 1%_1/16W
U1
TI_SN74LVC1G07DBVR
23 USB_OTG_ID
Q58 NL/NX7002AK 0.3A/60V
R9 100K 1%_1/16W
USB_OTG_ID_C
R5 22 1%_1/16W
R4 NL/10K 1%_1/16W
ADVANTECH
Title GigaLAN & USB_2 & OTG
Size
Document Number ROM-DB7501
Rev A102-1
Tuesday, June 20, 2017
Date:
Sheet 14 of 23

PCIe Slot

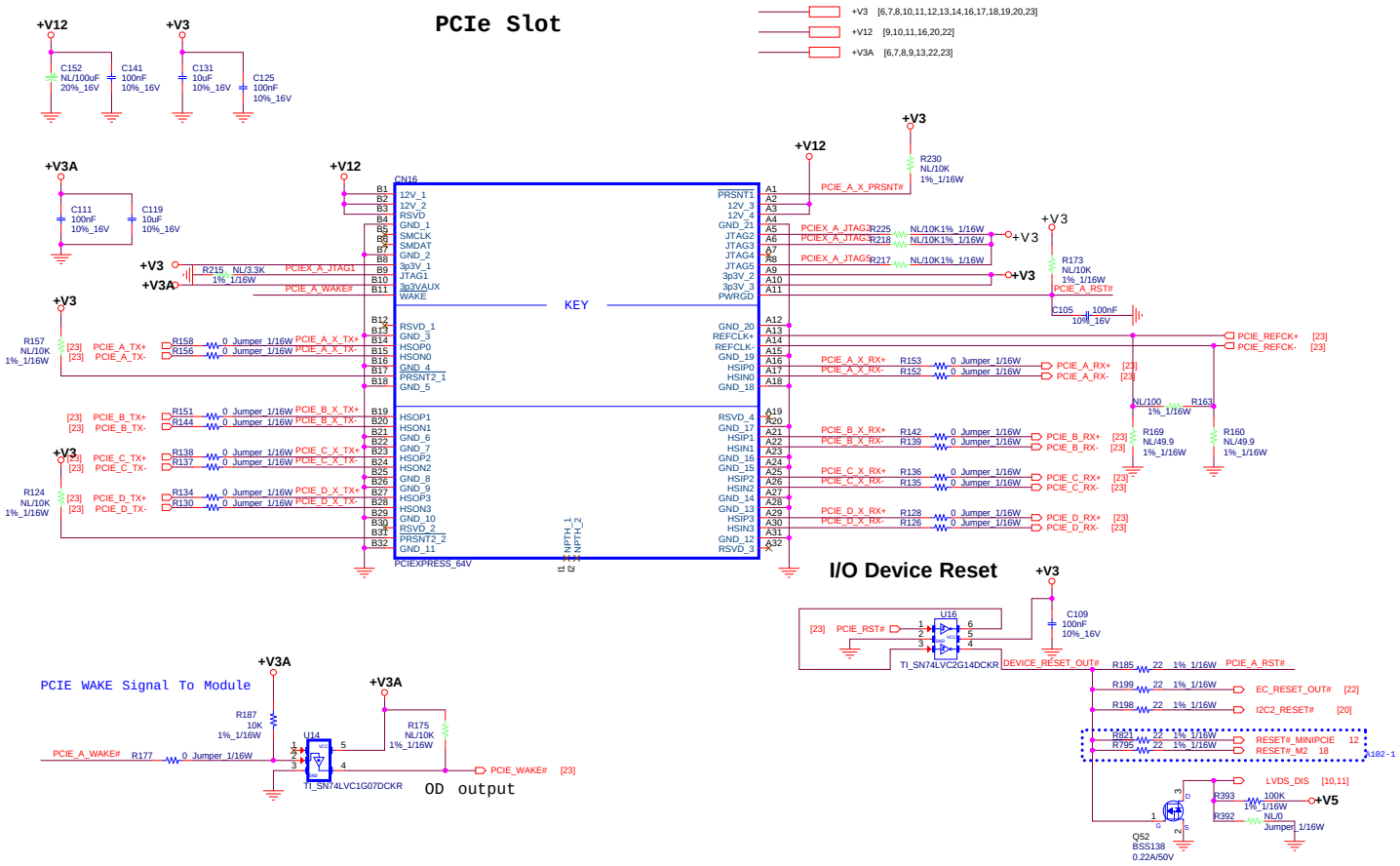

I/O Device Reset

PCIE WAKE Signal To Module

OD output

Title	PCI-E		
Size	Document Number	ROM-DB7502	Rev A102-1
Date:	Tuesday, June 20, 2017	Sheet 15 of 23	

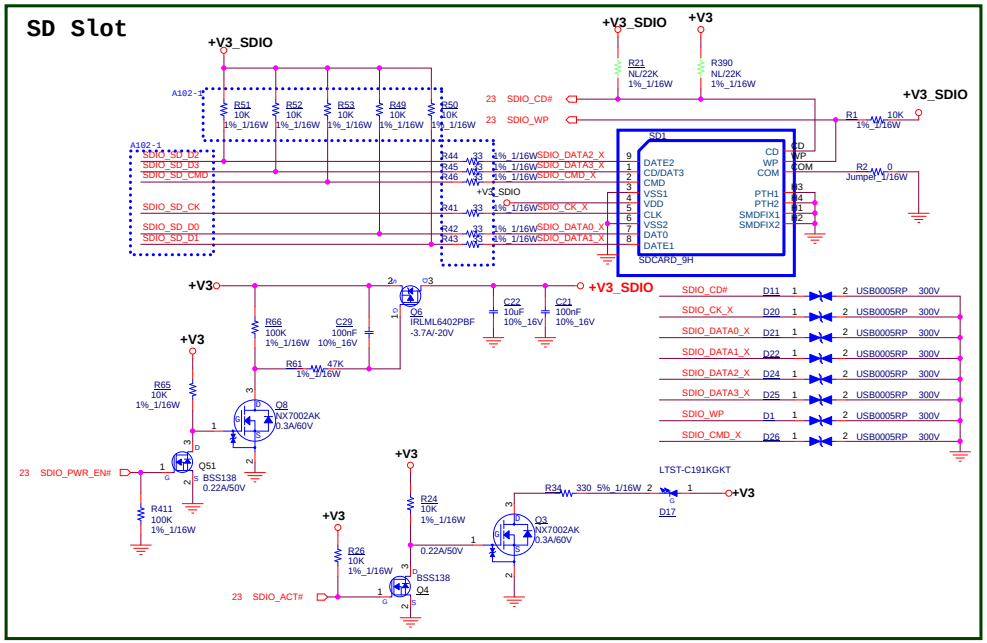

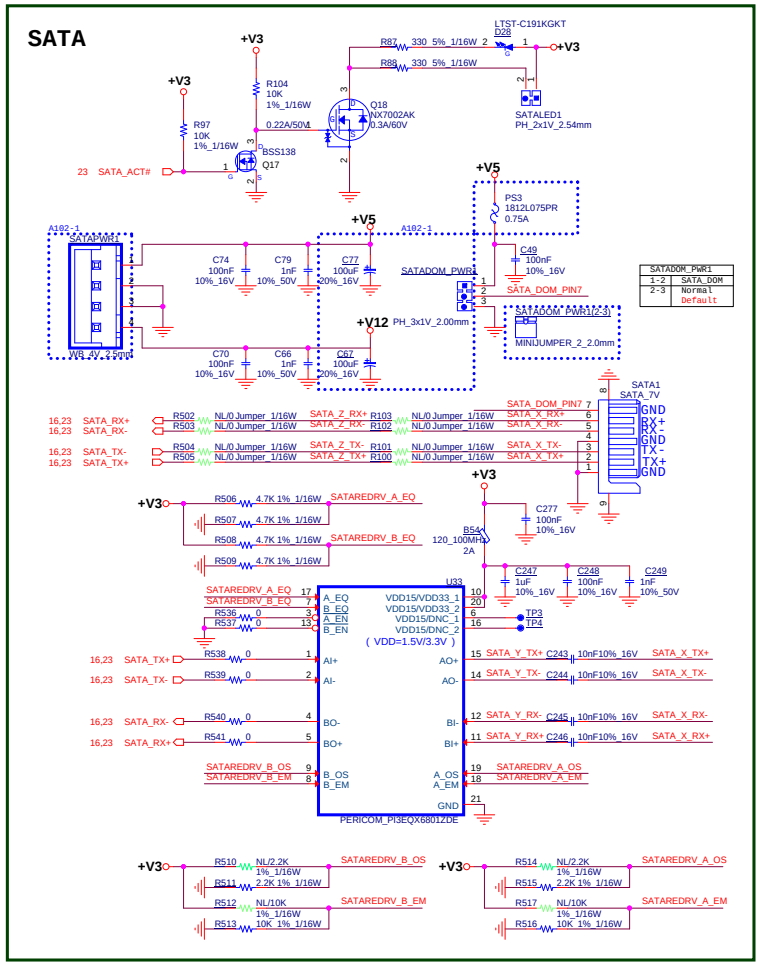

+V3	6,7,8,10,11,12,13,14,15,17,18,19,20,21,22,23
+V5	8,10,11,12,13,14,15,17,19,20,21,22,23
+V12	9,10,11,15,20,21,22

SATADOM_PWR1	
1-2	SATA_DOM
2-3	Normal Default

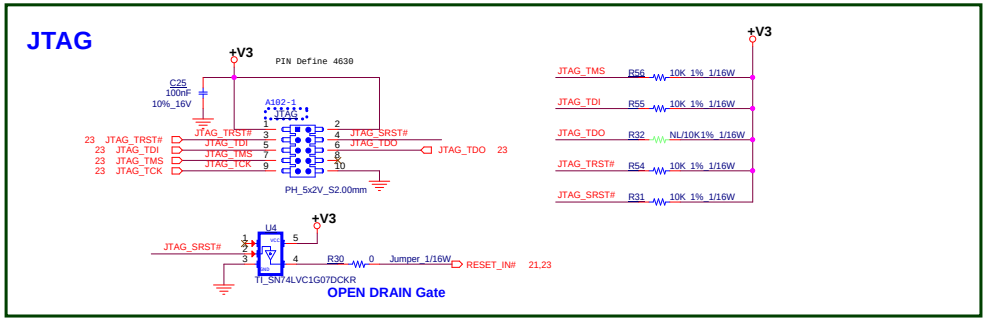

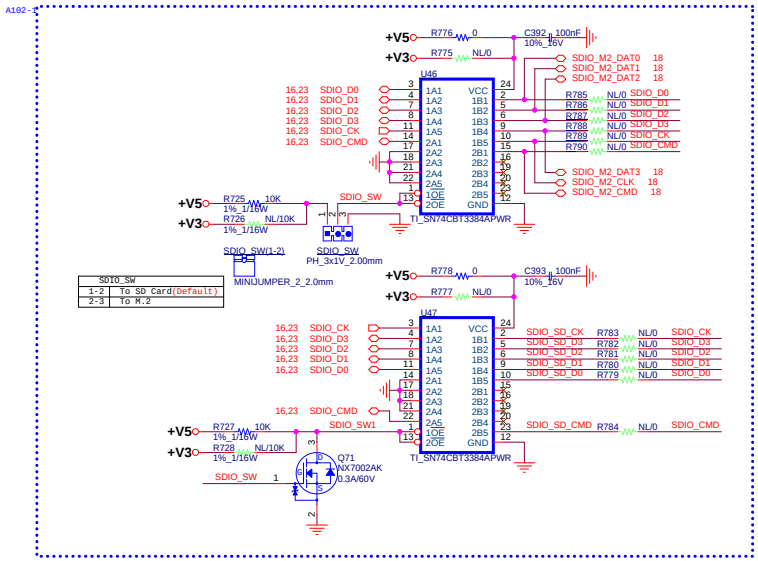

SDIO_SW	
1-2	To SD Card(Default)
2-3	To M.2

ADVANTECH

Title	SATA, SDIO, JTAG
Size	
Document Number	ROM-DB7502
Rev	A102-1
Date:	Tuesday, June 20, 2017
Sheet	16 of 23

CAN0

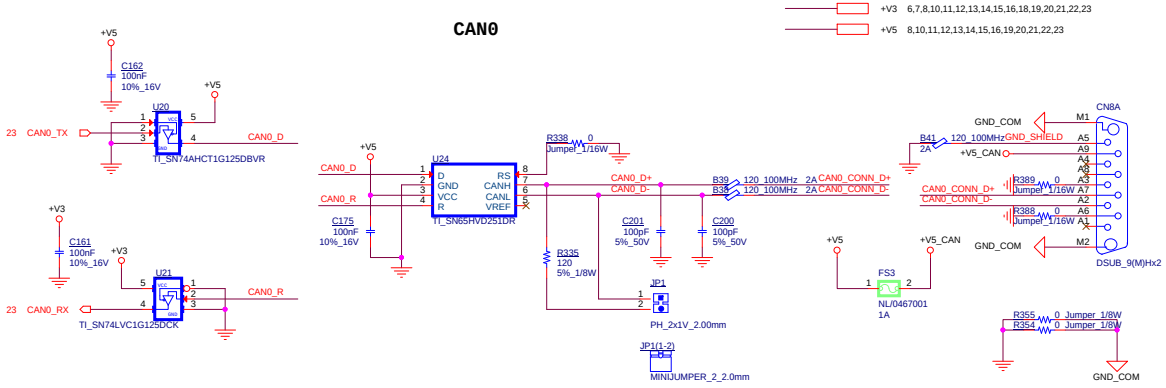

ADVANTECH			
Title	CAN BUS		
Size	Document Number	ROM-DB7502	Rev A102-1
	Tuesday, June 20, 2017		
Date:		Sheet 17 of 23	

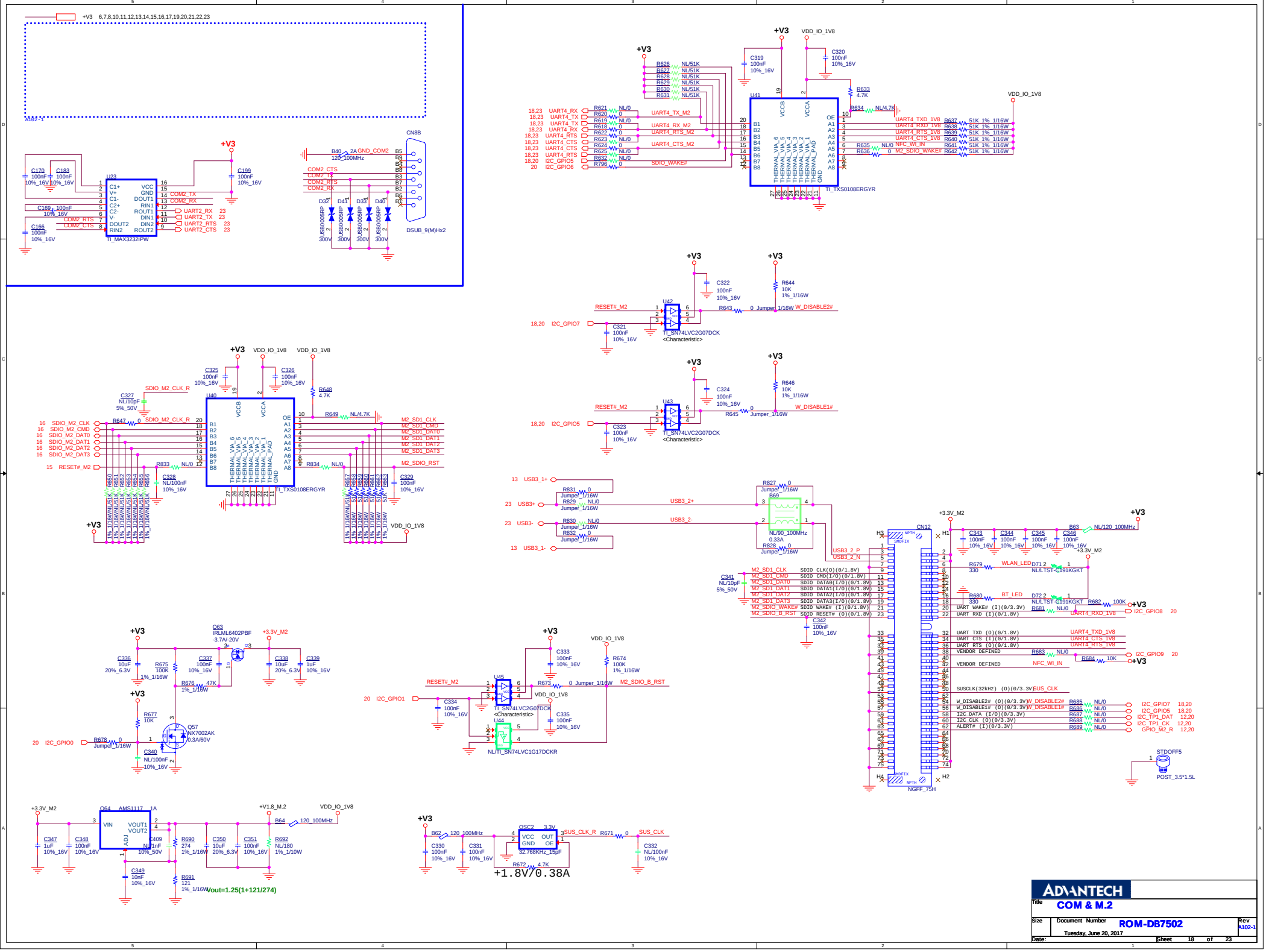
+V3 6,7,8,10,11,12,13,14,15,16,17,19,20,21,22,23
U23
TI_MAX3232IPW
CN8B
DSUB_9(M)Hx2
U41
TI_TXS0108ERGYR
U42
TI_SN74LVC2G07DCK
U43
TI_SN74LVC2G07DCK
U40
TI_TXS0108ERGYR
Q63
IRLML6402PBF
-3.7A/-20V
Q57
NX7002AK
0.3A/60V
U45
TI_SN74LVC2G07DCK
U44
NL/TI_SN74LVC1G17DCKR
Q64
AMS1117
CN12
NGFF_75H
STDOFF5
POST_3.5*1.5L
+1.8V/0.38A
Vout=1.25(1+121/274)
ADVANTECH
Title COM & M.2
Size
Document Number ROM-DB7502
Rev A102-1
Tuesday, June 20, 2017
Date:
Sheet 18 of 23

I2S0 connect to CODEC

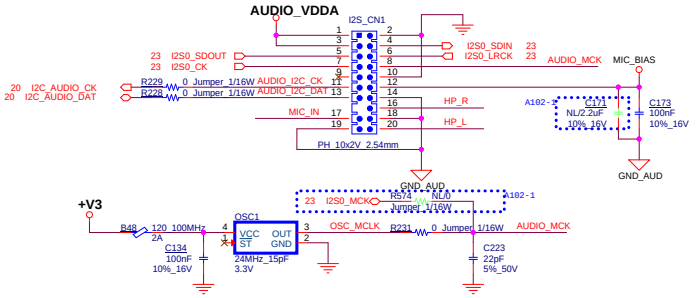

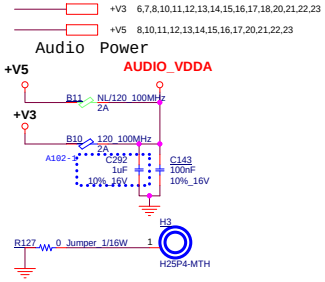

Phone JACK

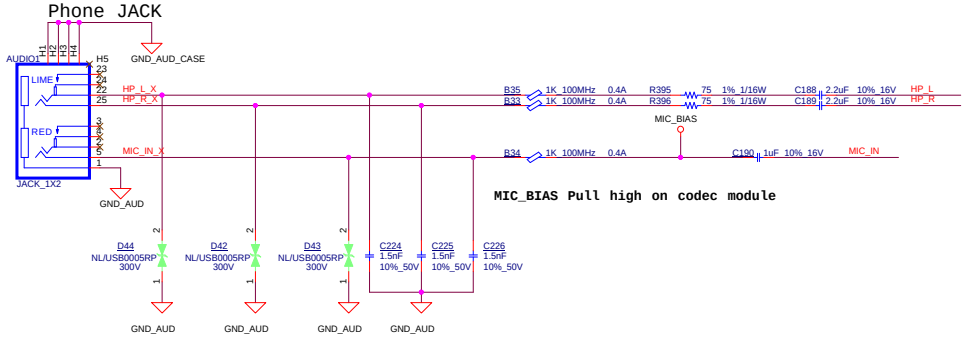

MIC_BIAS Pull high on codec module

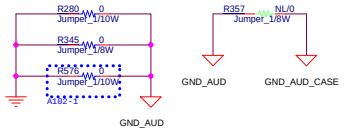

ADVANTECH			
Title	I2S & Audio		
Size	Document Number ROM-DB7502		Rev A102-1
Date: Tuesday, June 20, 2017	Sheet 19 of 23		

GPIO

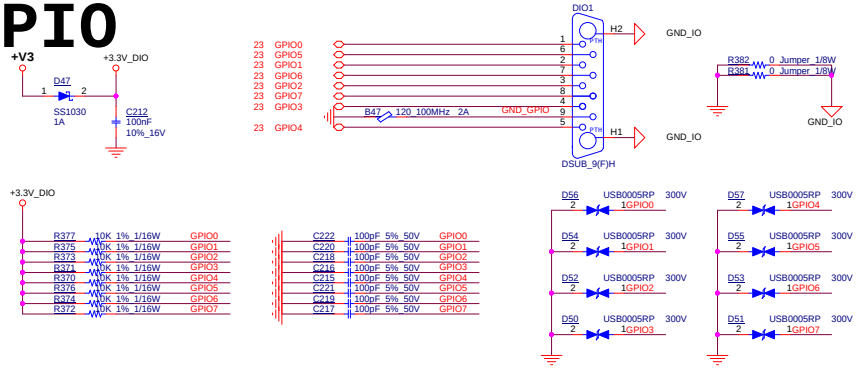

POWER LEDs

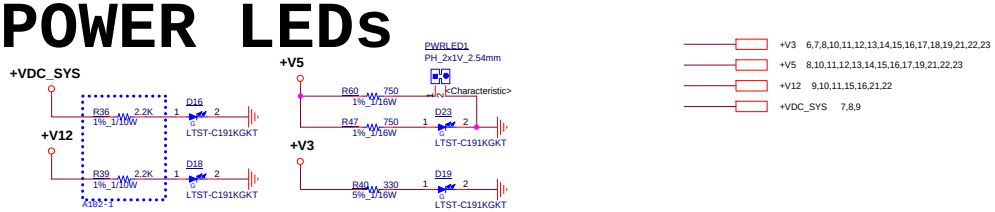

I2C Switch

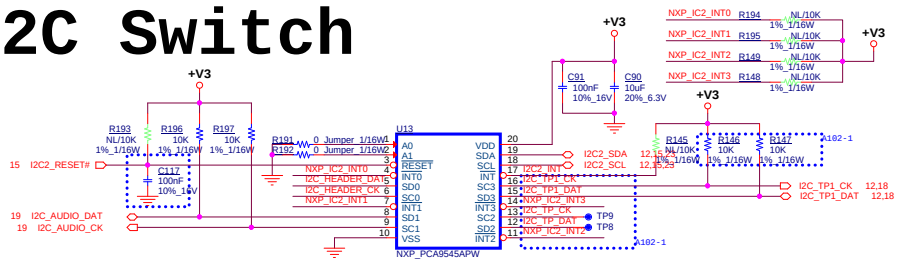

SPI CONNECTOR

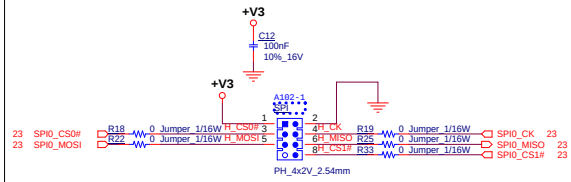

I2C Header

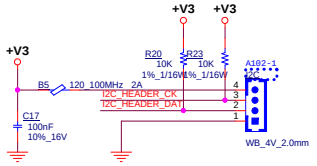

I2C TO GPIO

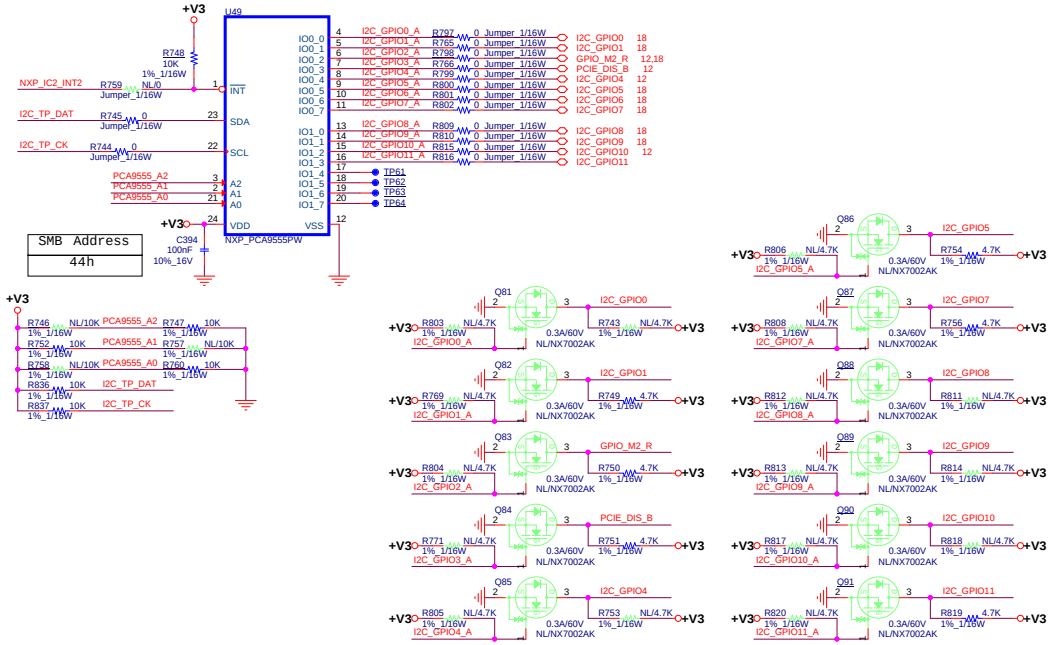

GPII & GPO

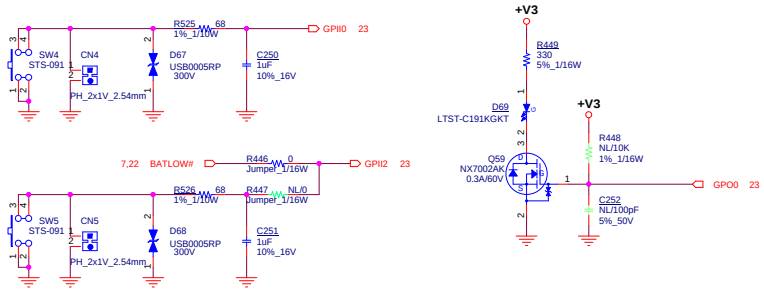

ADVANTECH

Title	SPI, I2C,LED, GPIO		
Size	Document Number ROM-DB7502		Rev A102-1
Date: Tuesday, June 20, 2017		Sheet 20 of 23	

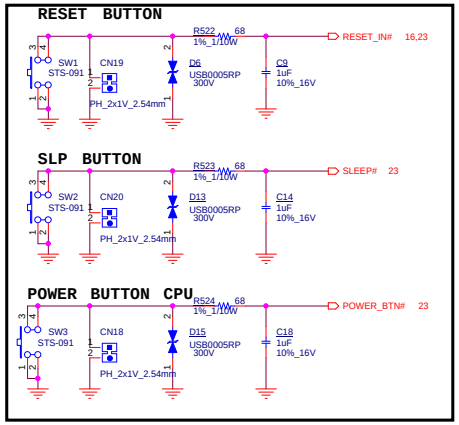

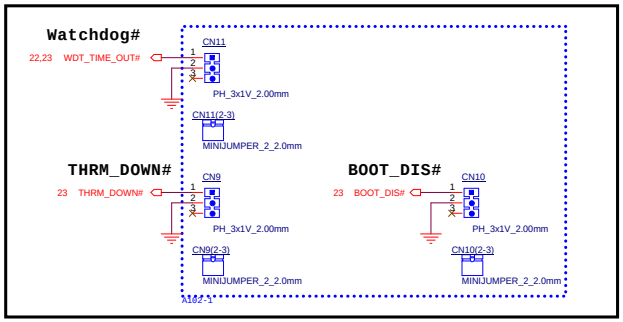

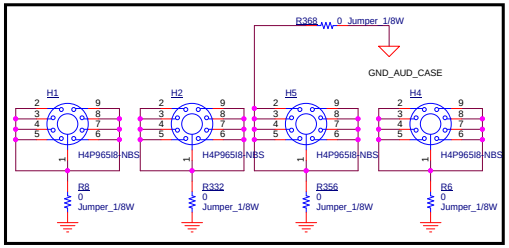

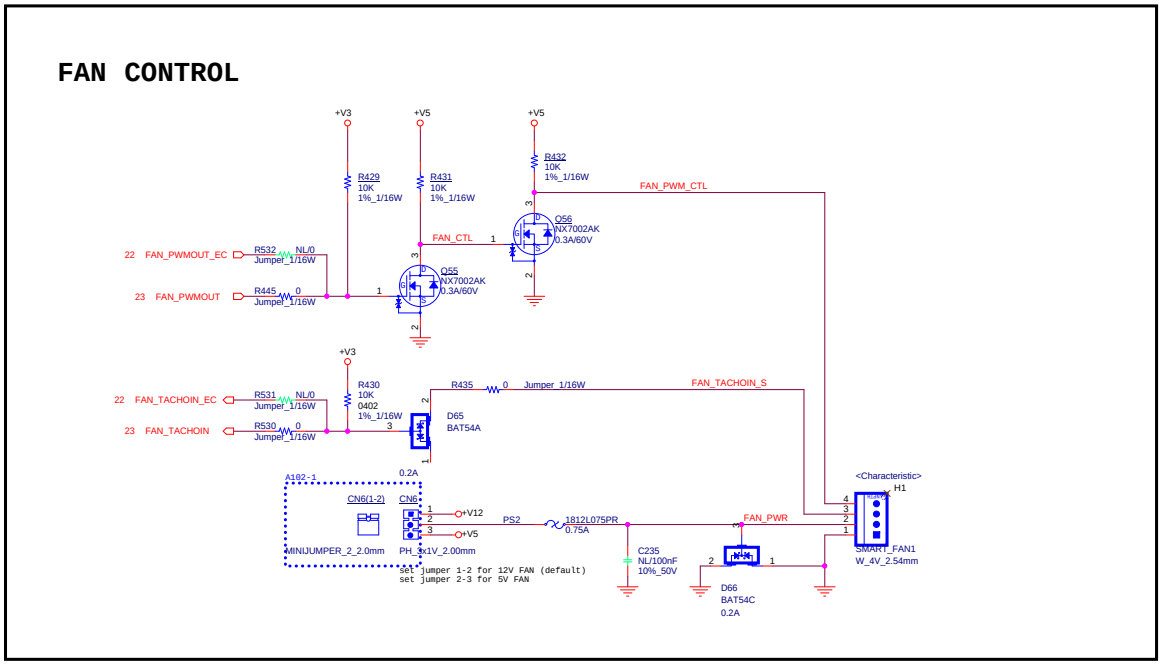

ADVANTECH

Title	BUTTON & FAN	
Size	Document Number ROM-DB7502	Rev A102-1
Date: Tuesday, June 20, 2017	Sheet 21 of 23	

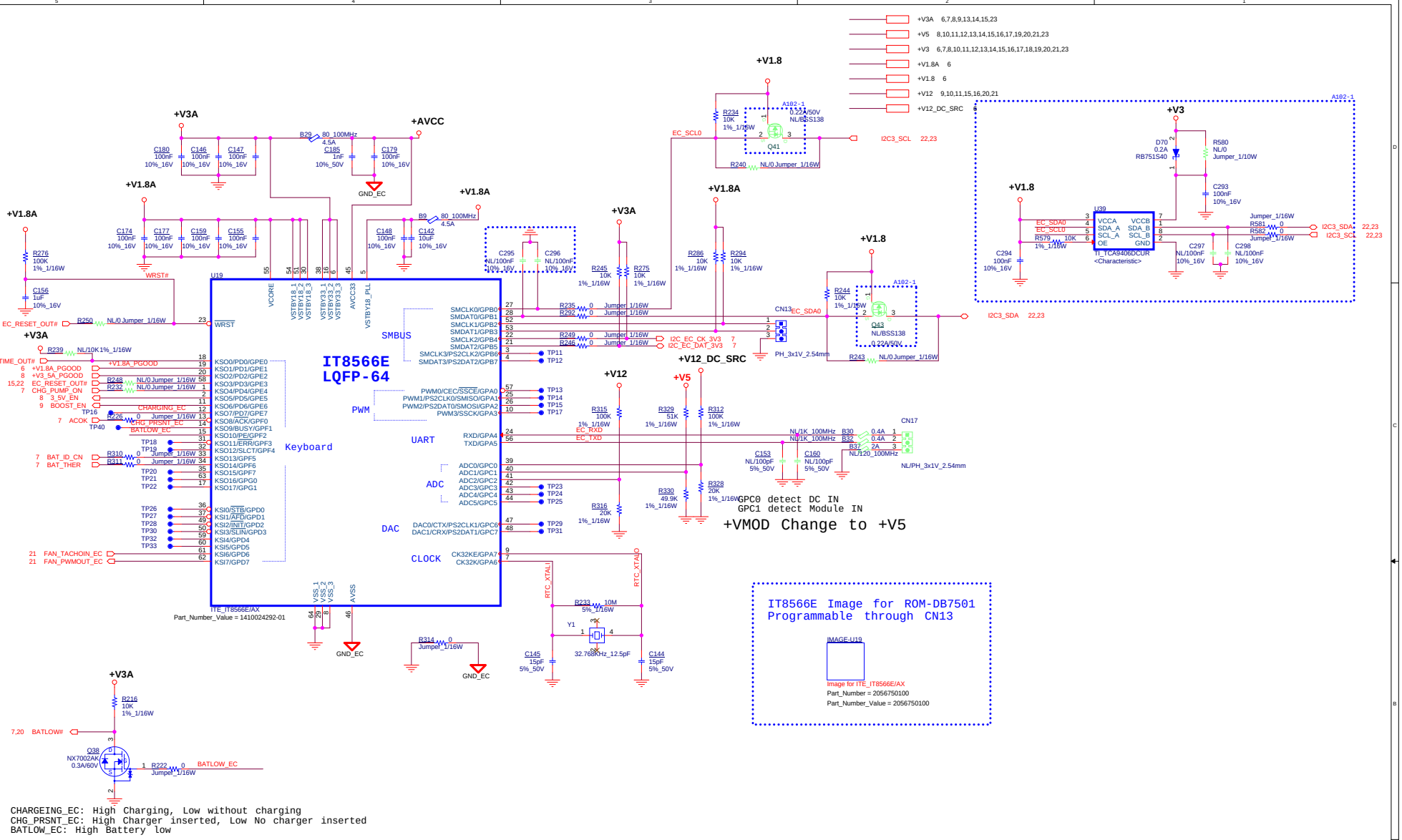

ADVANTECH

Title	EC		
Size	Document Number	ROM-DB7502	Rev A102-1
Date:	Tuesday, June 20, 2017	Sheet 22 of 23	

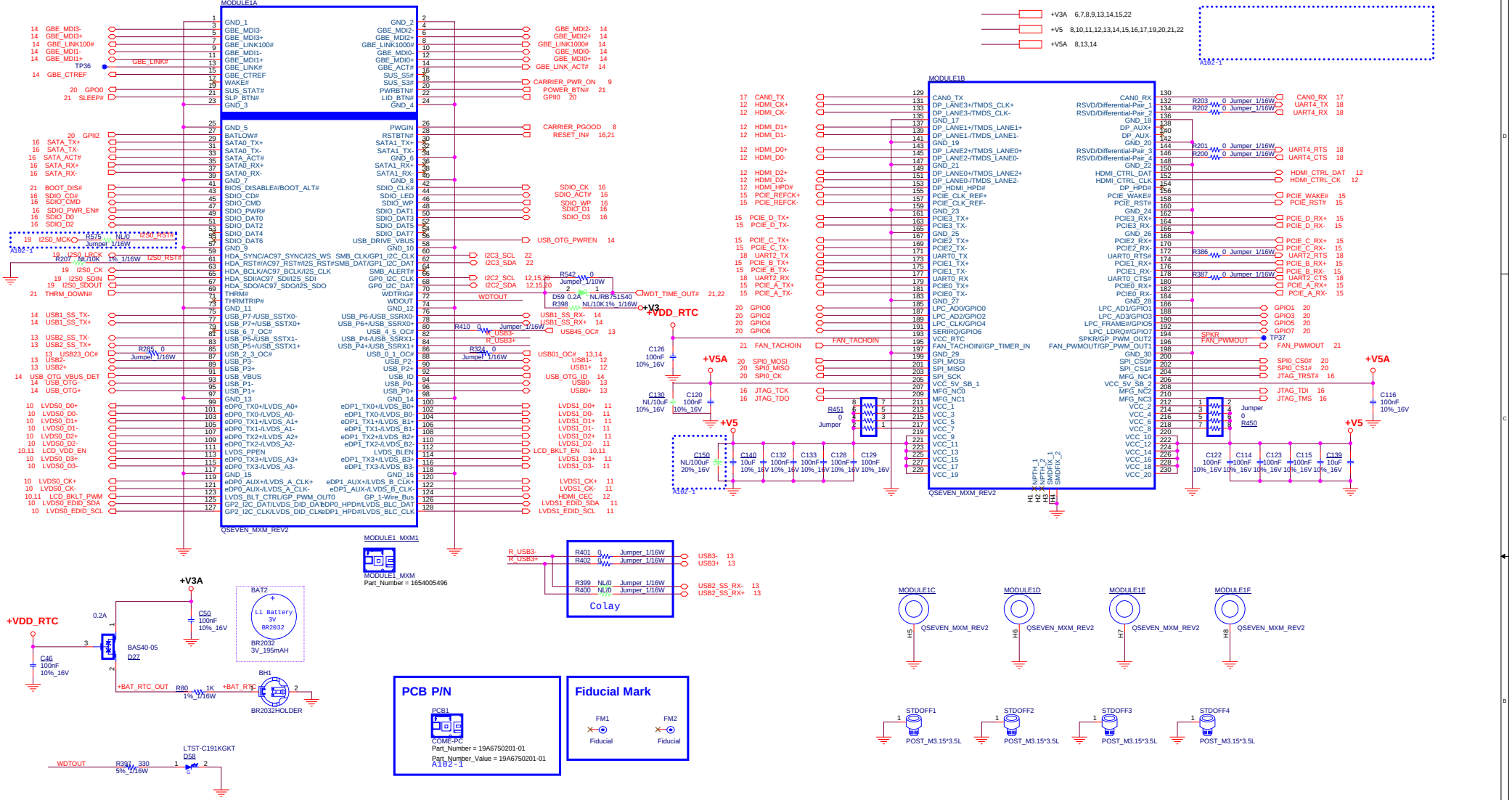

Title	QSEVEN_MXM CONNECTOR
Size	
Document Number	ROM-DB7502
Rev	A102-1
Date:	Tuesday, June 20, 2017
Sheet	23 of 23